TM-366
1st printing

ATARI GAMES

RAMPART™

3-Player Game

Operator's Manual with Schematics

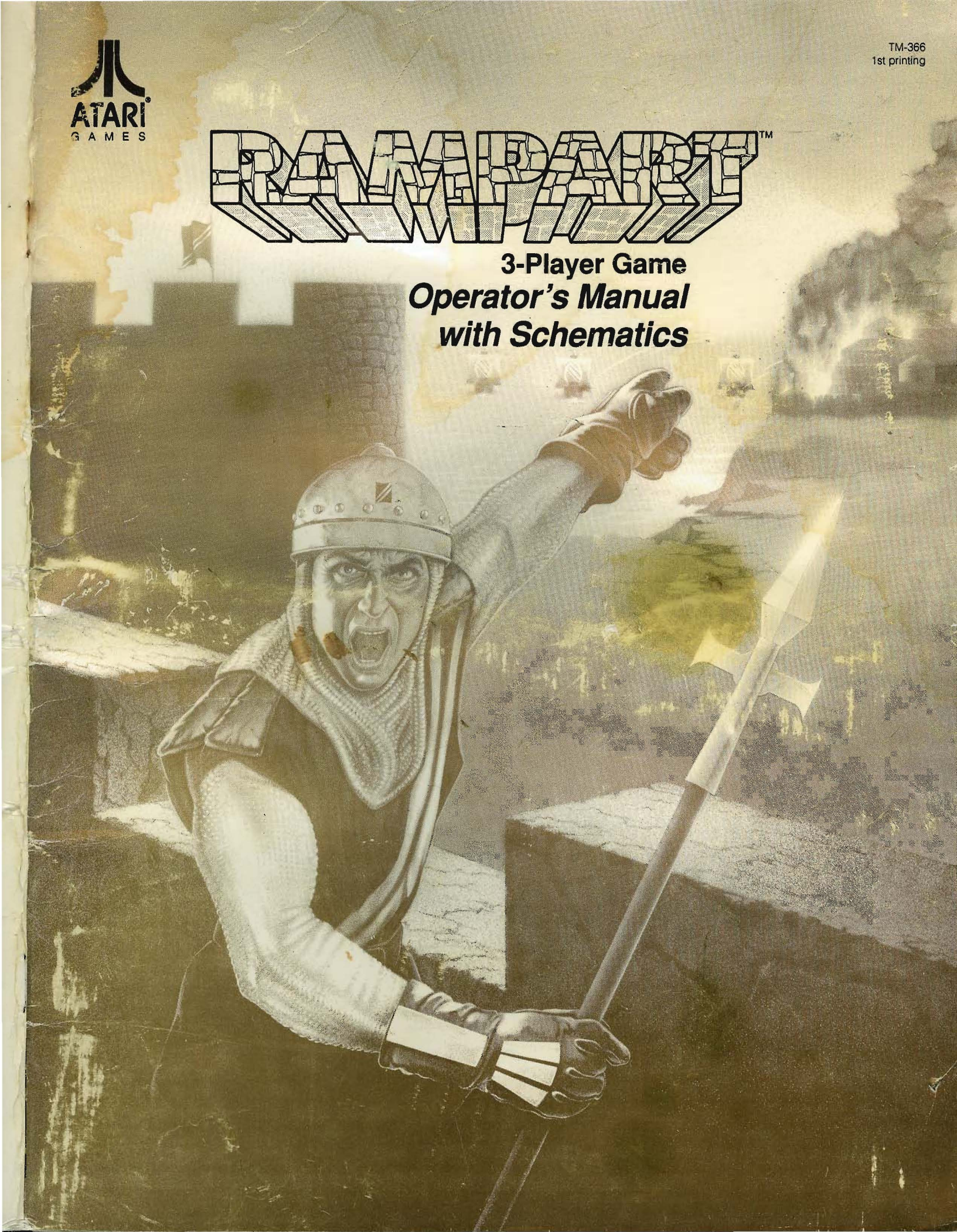

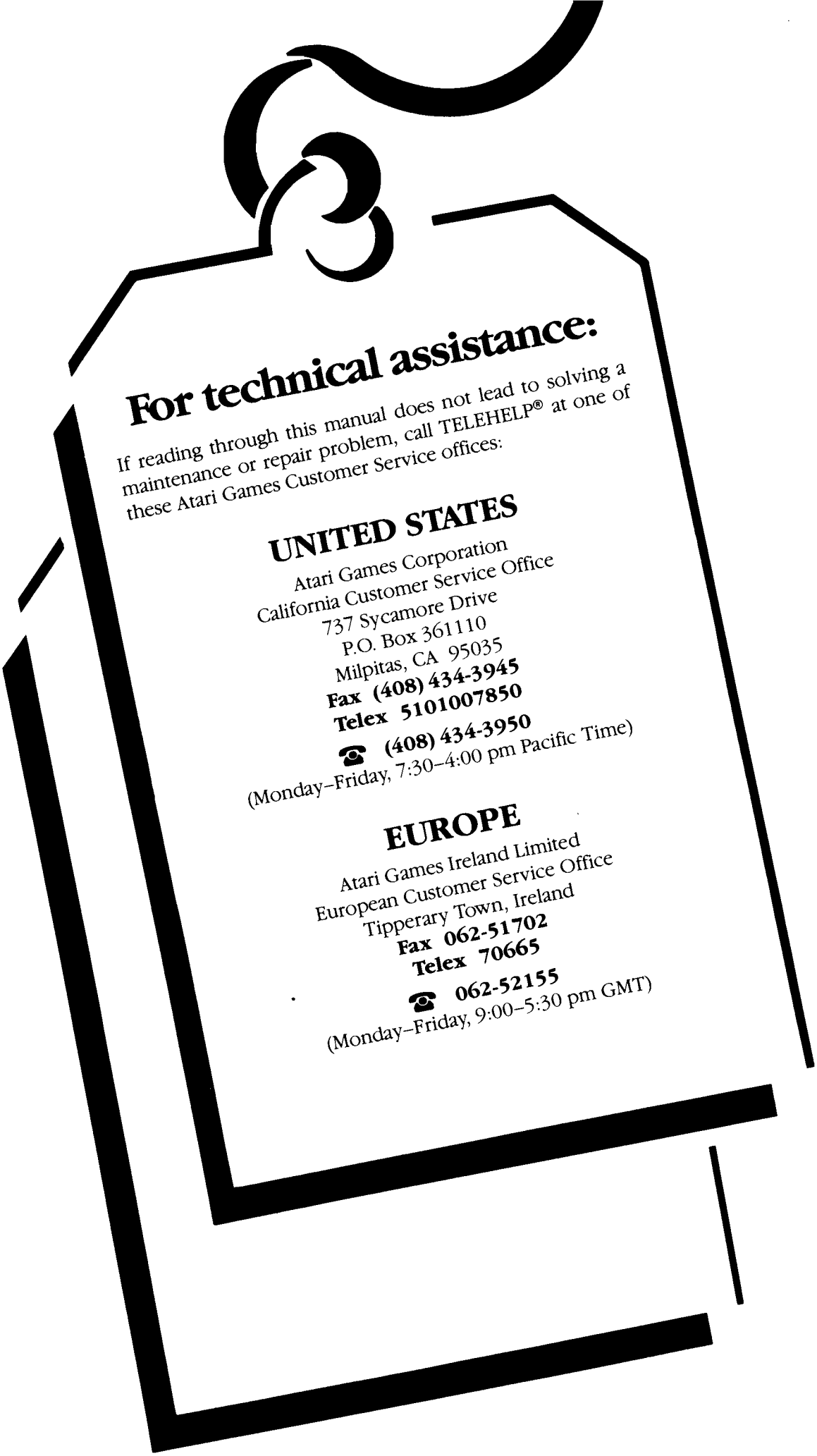

For technical assistance:

If reading through this manual does not lead to solving a maintenance or repair problem, call TELEHELP® at one of these Atari Games Customer Service offices:

UNITED STATES

Atari Games Corporation
California Customer Service Office
737 Sycamore Drive
P.O. Box 361110
Milpitas, CA 95035
Fax (408) 434-3945
Telex 5101007850
☎ **(408) 434-3950**
(Monday–Friday, 7:30–4:00 pm Pacific Time)

EUROPE

Atari Games Ireland Limited
European Customer Service Office
Tipperary Town, Ireland
Fax 062-51702
Telex 70665
☎ **062-52155**
(Monday–Friday, 9:00–5:30 pm GMT)

Warranty

Seller warrants that its printed-circuit boards and parts thereon are free from defects in material and workmanship under normal use and service for a period of ninety (90) days from date of shipment. Seller warrants that its video displays and laser video disc players (in games supplied with displays and video-disc players) are free from defects in material and workmanship under normal use and service for a period of thirty (30) days from date of shipment. None of the Seller's other products or parts thereof are warranted.

If the products described in this manual fail to conform to this warranty, Seller's sole liability shall be, at its option, to repair, replace, or credit Buyer's account for such products which are returned to Seller during said warranty period, provided:

(a) Seller is promptly notified in writing upon discovery by Buyer that said products are defective;

(b) Such products are returned prepaid to Seller's plant; and

(c) Seller's examination of said products discloses to Seller's satisfaction that such alleged defects existed and were not caused by accident, misuse, neglect, alteration, improper repair, installation, or improper testing.

In no event shall Seller be liable for loss of profits, loss of use, incidental or consequential damages.

Except for any express warranty set forth in a written contract between Seller and Buyer which contract supersedes the terms herein, this warranty is expressed in lieu of all other warranties expressed or implied, including the implied warranties of merchantability and fitness for a particular purpose, and of all other obligations or liabilities on the Seller's part, and it neither assumes nor authorizes any other person to assume for the Seller any other liabilities in connection with the sale of products by Seller.

The use of any non-Atari parts may void your warranty, according to the terms of the warranty. The use of any non-Atari parts may also adversely affect the safety of your game and cause injury to you and others. Be very cautious in using non-Atari-supplied components with our games, in order to ensure your safety.

Atari distributors are independent, being privately owned and operated. In their judgment they may sell parts or accessories other than Atari parts or accessories. Atari Games Corporation cannot be responsible for the quality, suitability or safety of any non-Atari part or any modification including labor which is performed by such distributor.

RAMPART™

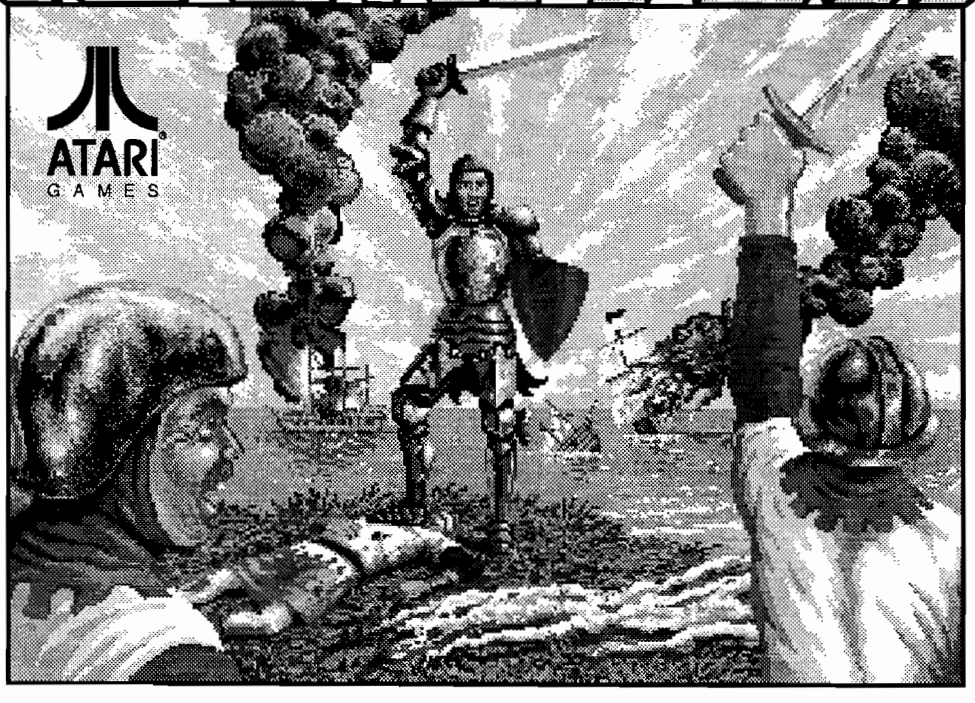

Operator's Manual

Dedicated three-player game

Copyright © 1990 by Atari Games Corporation. All rights reserved.

No part of this publication may be reproduced by any mechanical, photographic or electronic process, or in the form of a phonographic recording, nor may it be stored in a retrieval system, transmitted, or otherwise copied for public or private use, without permission from the publisher.

The game play, all graphic designs, this technical manual, its accompanying schematic diagrams, and the display manual are protected by the U.S. Copyright Act of 1976.

This Act provides for substantial penalties for violating federal copyright laws. Courts can impound infringing articles while legal action is pending. If infringers are convicted, courts can order destruction of the infringing articles.

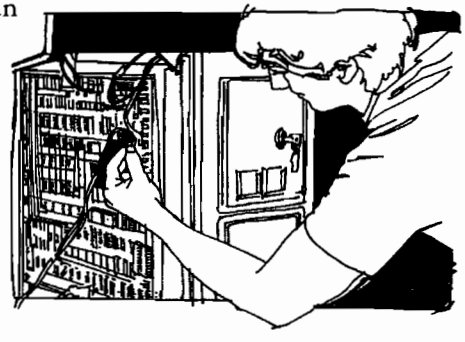

In addition, the Act provides for payment of statutory damages of up to $50,000 per infringing transaction in certain cases. Infringers may also have to pay costs and attorneys' fees and face an imprisonment of up to five years as well as fines of up to $250,000 in the case of individuals and up to $500,000 in the case of corporations.

Atari Games Corporation will aggressively enforce its copyrights against infringers. We will use all legal means to immediately halt any manufacture, distribution, or operation of a copy of video games made by us. Anyone who purchases such copies risks forfeiting such a game.

Published by:
Atari Games Corporation
675 Sycamore Drive
P.O. Box 361110
Milpitas, California 95036

Printed in the U.S.A. **12/90**

Produced by:
The Atari Games Technical Publications Department.
Writing and Editing: Andrea Dencker
Illustration and Design: Mary Ohanessian Sumner

NOTICE RE. NON-ATARI PARTS

WARNING

Use of non-Atari parts or modifications of any Atari game circuitry may adversely affect the safety of your game, and may cause injury to you and your players.

You may void the game warranty (printed on the inside back cover of this manual) if you do any of the following:

- Substitute non-Atari parts in the game.
- Modify or alter any circuits in the game by using kits or parts *not* supplied by Atari Games Corporation.

NOTE

This equipment generates, uses, and can radiate radio frequency energy, and if not installed and used in accordance with the instruction manual, may cause interference to radio communications. It has been tested and found to comply with the limits for a Class A computing device pursuant to Subpart J of Part 15 of Federal Communications Commission (FCC) Rules, which are designed to provide reasonable protection against such interference when operated in a commercial environment. Operation of this equipment in a residential area or modification to this equipment is likely to cause interference, in which case the user, at his own expense, will be required to take whatever measures may be required to correct the interference. If you suspect interference from an Atari game at your location, check the following:

- All ground wires in the game are properly connected as shown in the game wiring diagram.
- The power cord is properly plugged into a grounded three-wire outlet.
- On games provided with an Electromagnetic Interference (EMI) ground cage, be sure that the game printed-circuit boards (PCBs) are properly installed on the EMI ground cage and that the end board is securely installed with **all** screws in place and tightened.

If you are still unable to solve the interference problem, please contact Customer Service at Atari Games Corporation. See the inside front cover of this manual for service in your area.

SAFETY SUMMARY

The following safety precautions apply to all game operators and service personnel. Specific warnings and cautions will be found in this manual whenever they apply.

WARNING

Properly Ground the Game. Players may receive an electrical shock if this game is not properly grounded! To avoid electrical shock, do not plug in the game until it has been inspected and properly grounded. This game should only be plugged into a grounded three-wire outlet. If you have only a two-wire outlet, we recommend you hire a licensed electrician to install a three-wire grounded outlet. If the control panel is not properly grounded, players may receive an electrical shock! After servicing any part on the control panel, check that the grounding wire is firmly secured to the inside of the control panel. After you have checked this, lock up the game.

AC Power Connection. Before you plug in the game, be sure that the game's power supply can accept the AC line voltage in your location. The line voltage requirements are listed in the first chapter of this manual.

Disconnect Power During Repairs. To avoid electrical shock, disconnect the game from the AC power before removing or repairing any part of the game. If you remove or repair the video display, be very careful to avoid electrical shock. High voltages continue to exist even after power is disconnected in the display circuitry and the cathode-ray tube (CRT). Do not touch the internal parts of the display with your hands or with metal objects! Always discharge the high voltage from the CRT before servicing it. Do this after you disconnect it from the power source. First, attach one end of a large, well-insulated, 18-gauge jumper wire to ground. Then momentarily touch the free end of the grounded jumper wire to the CRT anode by sliding the wire under the anode cap. Wait two minutes and do this again.

Use Only Atari Parts. To maintain the safety of your Atari game, use only Atari parts when you repair it. Using non-Atari parts or modifying the game circuitry may be dangerous, and could injure you and your players.

Handle the CRT With Care. If you drop the CRT and it breaks, it may implode! Shattered glass from the implosion can fly six feet or more.

Use the Proper Fuses. To avoid electrical shock, use replacement fuses which are specified in the parts list for this game. Replacement fuses must match those replaced in fuse type, voltage rating, and current rating. In addition, the fuse cover must be in place during game operation.

CAUTION

Properly Attach All Connectors. Make sure that the connectors on each printed circuit board (PCB) are properly plugged in. The connectors are keyed to fit only one way. If they do not slip on easily, do not force them. If you reverse a connector, it may damage your game and void your warranty.

Ensure the Proper AC Line Frequency. Video games manufactured for operation on 60 Hz line power (used in the United States) must not be operated in countries with 50 Hz line power (used in Europe). If a 60 Hz machine operates on 50 Hz line power, the fluorescent line ballast transformer will overheat and cause a potential fire hazard. Check the product identification label on your machine for the line frequency required.

ABOUT NOTES, CAUTIONS, AND WARNINGS

In Atari publications, notes, cautions and warnings have the following meaning:

NOTE — A highlighted piece of information.

CAUTION — Equipment and/or parts can be damaged or destroyed if instructions are not followed. You will void the warranty on Atari printed-circuit boards, parts thereon, and video displays if equipment or parts are damaged or destroyed due to failure of following instructions.

WARNING — Players and/or technicians can be killed or injured if instructions are not followed.

CONTENTS

1 Set-Up

How to Use This Manual 1-1
Inspecting the Game 1-2
Control and Switch Locations 1-2
Installing the Control Panel 1-2
Setting the Coin and Game Options 1-3
Maximizing Earnings 1-3
Game Play 1-3

2 Self-Test

Introduction 2-1
Entering and Exiting the Self-Test 2-2
Select Test Menu 2-2
Statistics 2-2
Game Options 2-4
Coin Options 2-4
Sound Test 2-5
Controls Test 2-6
Complete RAM Test 2-6
Complete ROM Test 2-7
Playfield Test 2-7
Motion Object Test 2-7
Color Test 2-7
Color Purity Test 2-8
Convergence Test 2-8

3 Maintenance and Troubleshooting

Repairing the Video Display 3-3
Repairing and Replacing the Midi Trak-Ball Control 3-4
ROMs and RAMs 3-4

4 Parts Illustrations

See the List of Illustrations that follows.

5 Schematic Diagrams

See the List of Illustrations that follows.

Statistics Sheet

Warranty

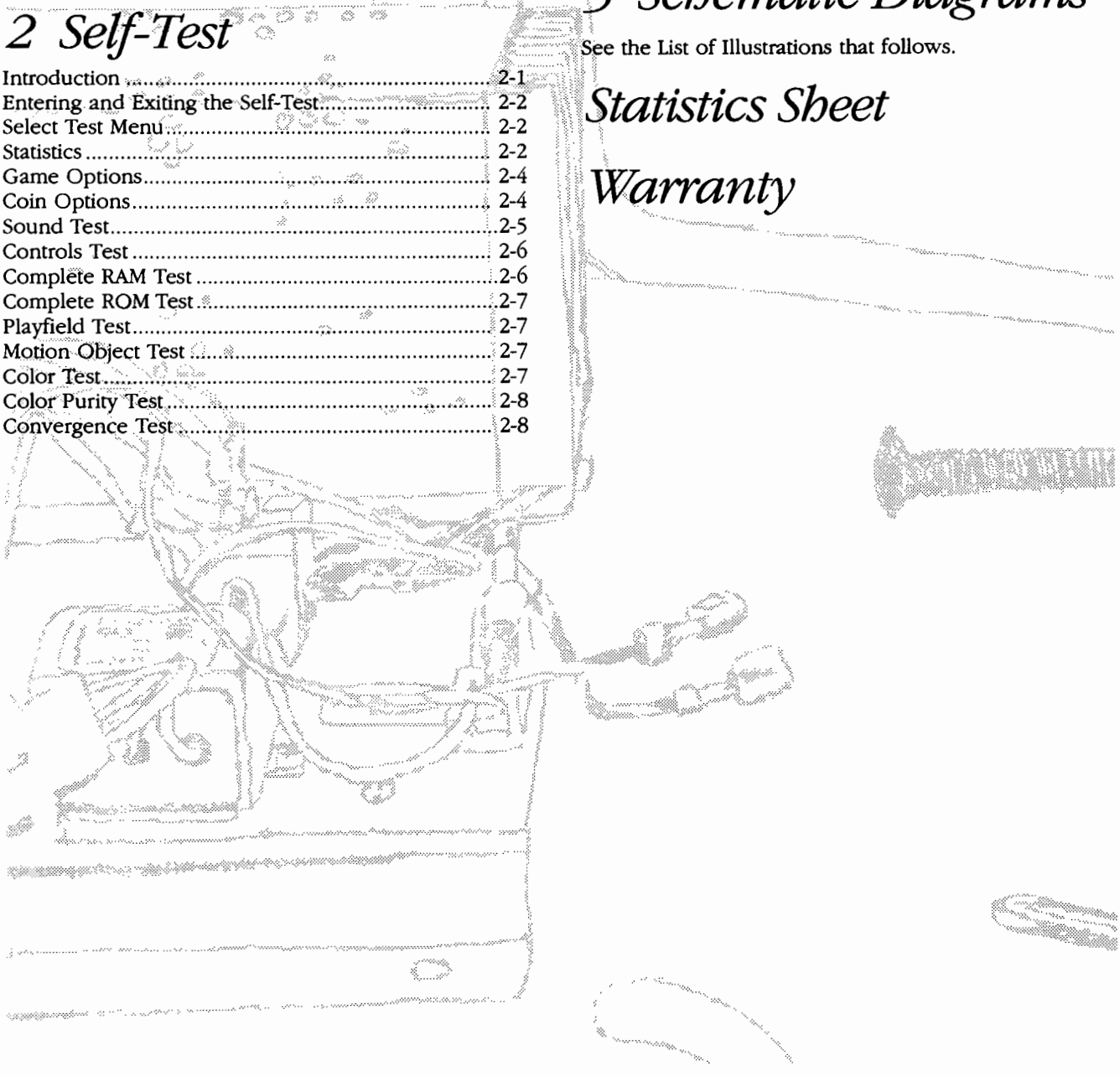

ILLUSTRATIONS

Figure 1-1 Control and Switch Locations 1-3

Figure 2-1 Self-Test Menu Screen 2-2
Figure 2-2 Statistics Screen 2-3
Figure 2-3 Game Options Screen 2-4
Figure 2-4 Coin Options Screen 2-5
Figure 2-5 Sound Test Screen 2-6
Figure 2-6 Controls Test Screen 2-6
Figure 2-7 RAM Test Menu 2-6
Figure 2-8 Complete ROM Test Screen 2-7
Figure 2-9 Playfield Test Screen 2-7
Figure 2-10 Motion Object Test Screen 2-7
Figure 2-11 Color Test Screen 2-8
Figure 2-12 Convergence Test Screen 2-8

Figure 3-1 Maintaining the Midi Trak-Ball 3-4

Figure 4-1 Cabinet-Mounted Assemblies 4-2
Figure 4-2 Control Panel Assembly 4-4
Figure 4-3 Midi Trak-Ball Assembly 4-5
Figure 4-4 Coin Controls, Inc. Coin Door Assembly 4-6
Figure 4-5 Power Supply Assembly 4-9
Figure 4-6 Rampart Game PCB Assembly (3-Player Version) 4-10

Figure 5-1 Rampart Game PCB Assembly Schematic Diagram 5-2
Figure 5-2 JSA Audio II PCB Assembly Schematic Diagram 5-8
Figure 5-3 Game Wiring Diagram 5-10
Figure 5-4 Rampart Coupler PCB Assembly Schematic Diagram 5-12
Figure 5-5 Faulty RAM/ROM Tables 5-12

TABLES

Table 1-1 Game Specifications 1-2

Table 2-1 Summary of All Self-Test Screens 2-2
Table 2-2 Game Option Settings 2-4
Table 2-3 Coin Option Settings 2-5
Table 2-4 Bad RAM Locations by Error Address 2-6
Table 2-5 Bad ROM Locations by Error Address 2-7

Table 3-1 Troubleshooting Table 3-2
Table 3-2 Voltage Inputs and Test Points on the PCB 3-3
Table 3-3 What ROM Problems Look Like 3-4

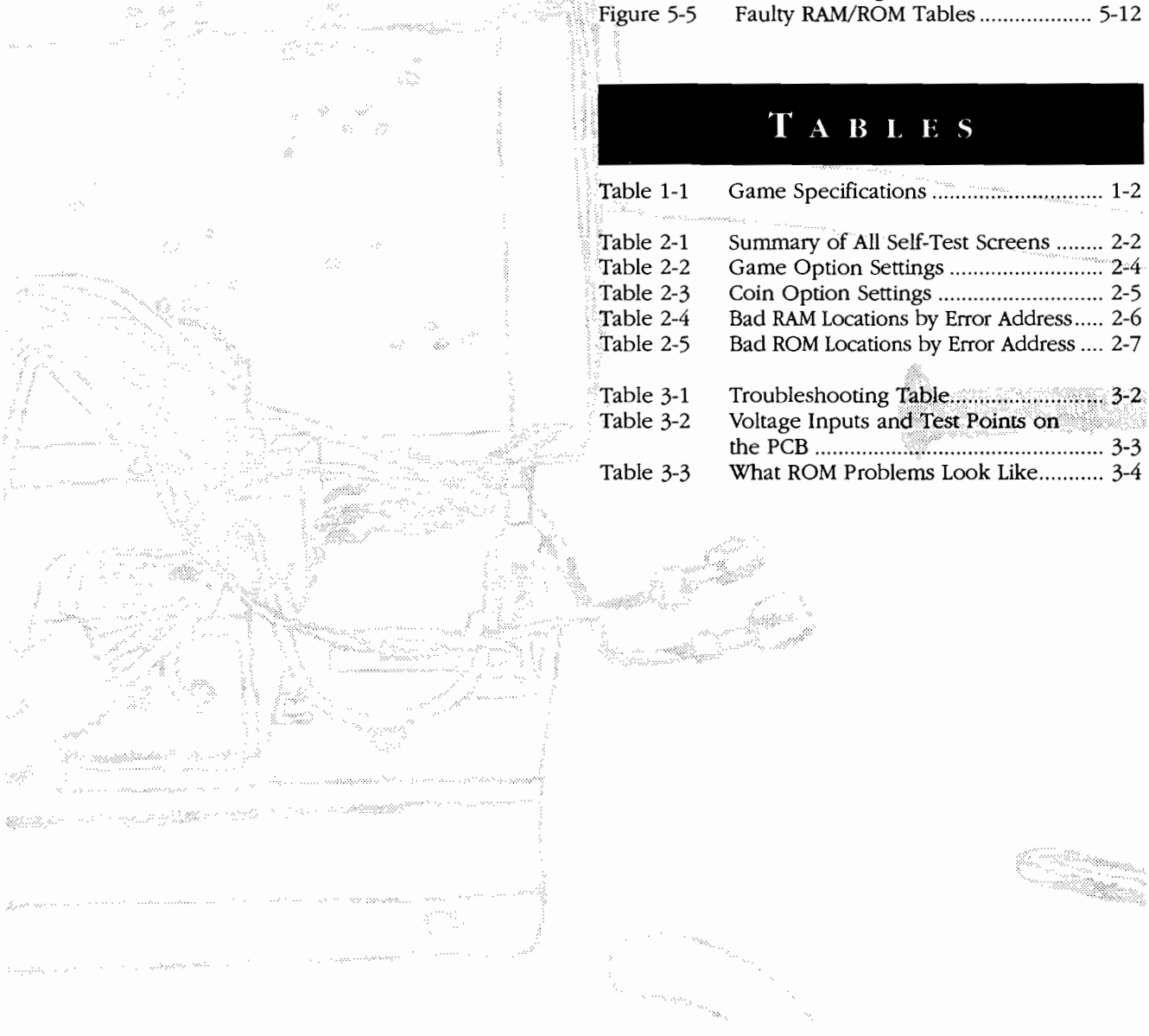

NOTES

CHAPTER 1

Set-Up

How to Use This Manual

This manual is written for operators and service personnel. It provides information for setting up, playing, testing, and maintaining your Rampart™ three-player game. The manual is divided into the following chapters: ❖ Chapter 1 contains set-up and game playing information. ❖ Chapter 2 describes the self-test and how to use the self-test screens. ❖ Chapter 3 contains maintenance, repair, and trouble-shooting procedures. Be sure to perform the preventive maintenance tasks to keep the game in good condition. ❖ Chapter 4 contains the parts illustrations. ❖ Chapter 5 contains the schematics for the Rampart game printed-circuit board (PCB) and the Midi Trak-Ball coupler PCB, plus the game wiring diagram.

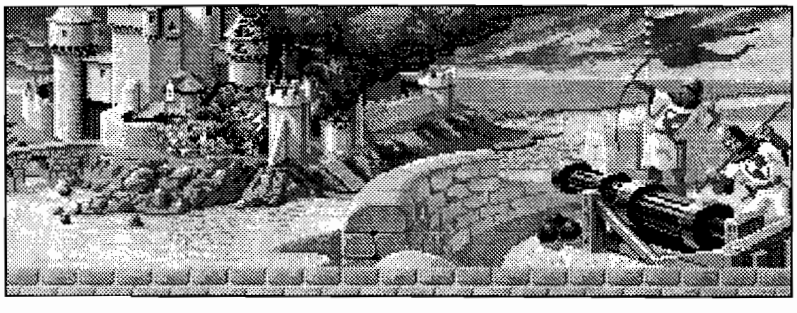

Inspecting the Game

WARNING

To avoid electrically shocking yourself and damaging the game electronics, do not plug in the game until it has been inspected and set up for your line voltage.

This cabinet should be connected to a grounded three-wire outlet only. If you have only two-wire outlets, we recommend that you hire a licensed electrician to install grounded outlets. Players can receive an electrical shock if the cabinet is not properly grounded.

Inspect your Rampart game carefully to ensure that the game is complete and was delivered to you in good condition.

Inspect the cabinet as follows:

1. Examine the exterior of the cabinet for dents, chips, or broken parts.
2. Open the service door. Unlock and open the coin doors. Inspect the interior of the cabinet as follows:
   a. Check that all plug-in connectors on the cabinet harnesses are firmly plugged in. Do not force connectors together. The connectors are keyed so they fit only in the proper orientation. A reversed connector can damage a printed-circuit board (PCB). This will void your warranty.
   b. Ensure that all plug-in integrated circuits on each PCB are firmly plugged into their sockets.
   c. Inspect the power cord for any cuts or dents in the insulation.
   d. Inspect the power supply. Make sure that the correct fuses are installed. Check that the harness is plugged in correctly and that the fuse block cover is mounted in place. Check that the green ground wire are connected.

Table 1-1 Game Specifications

Characteristic	Specification
Power Consumption	127 (??) W maximum
Line Fuse Rating	3 Amps
Line Voltage	102 to 132 VAC
Temperature	5° to 38° C (37° to 100° F)
Humidity	Not to exceed 95% relative
Width	33.25 inches (84 cm)
Depth	38.25 inches (97 cm)
Height	71.75 inches (182 cm)
Weight	325 lbs. (148 kg)

   e. Inspect other sub-assemblies, such as the video display, controls, printed-circuit boards (PCBs), and speakers. Make sure that they are mounted securely and that the ground wires are connected.

Control and Switch Locations

Most of the controls are located inside the drawer, behind the control panel (see Figure 1-1). The only exception is the power on/off switch.

Power On/Off Switch

The power on/off switch is located at the top left of the cabinet (behind the peak).

Volume Control

The volume control is located on the Rampart game PCB, which is in the drawer behind the control panel.

Self-Test Switch

The self-test switch is also located on the game PCB, in the drawer behind the control panel.

Coin Counter

The coin counter is located on the bottom of the coin box, inside the lower coin door.

Installing the Control Panel

Make sure the game power is turned off. To install the separately packaged control panel, you need the following tools:

- Hex driver or wrench
- Four flat washers (provided with game)
- Four nut-washer assemblies (provided with game)

1. Reach in through the openings on the front of the drawer, and open the spring draw latch on each side. Pull the drawer out partly. (See Figure 1-1.)
2. Hold the control panel up to the front of the drawer, and match up the four threaded studs with the four small holes (one in each corner). See Figure 1-2.
3. Install one flat washer and nut/washer assembly onto each threaded stud.
4. Plug the two control panel harness connectors into the game harness inside the drawer. These connectors are interchangeable, so be sure to match wire colors. Plug the ground wires together at the Fast-on connectors. This step is very important, since this wire grounds the control panel.
5. Close the drawer and snap shut both latches.

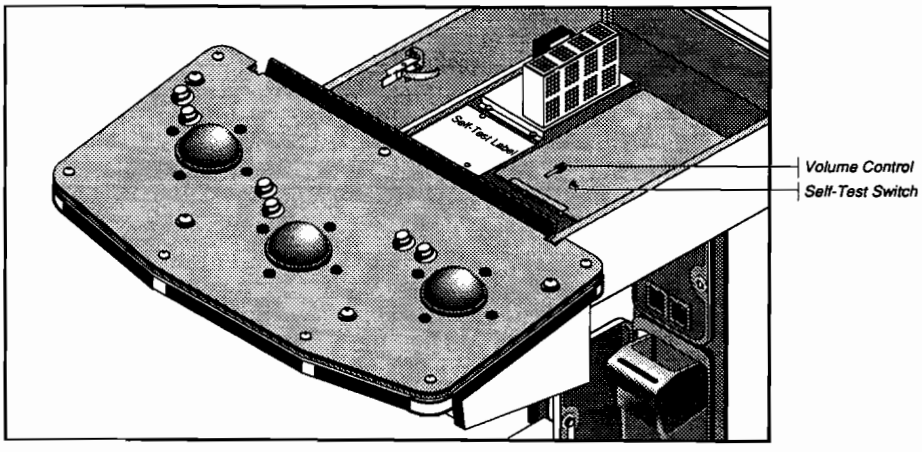

Figure 1-1 Location of Volume Control and Self-Test Switch

6. Turn on the game power. Check that the video display and the attraction lamp have power.
7. Observe the screen: you should see the attract mode displayed. If the screen remains a solid white, red, or blue color, you have a RAM failure. These failures are as follows:

White	Color RAM
Red	Bit-map RAM
Blue	Motion-object RAM

NOTE

The Rampart game does a short RAM test whenever you turn on the power. If you want to circumvent the solid white, red, or blue RAM failure screen and enter the self-test, push the self-test switch to the "on" position (to the right). Then turn the game power off and on again.

Setting the Coin and Game Options

The Rampart coin and game options are set in the self-test. Refer to Chapter 2 for the recommended settings and the procedure for setting the options.

Game Play

This section of the manual describes the theme of the Rampart game and the game play features.

Introduction

Rampart combines the best of strategy puzzle games with dynamite action and the excitement of head-to-head competition. Up to three players can play at once to see who becomes the medieval overlord.

Play Mode

In the first phase of game play, players select a site for their home castle and position their cannons. Then, it's on with the battle, as each side hurls projectiles to destroy enemy walls. Once the onslaught ends, the players must quickly rebuild and extend their walls before the next battle. The players must completely surround at least one castle in order to continue play.

In a multiple-player game, the contest is head-to-head for an operator-selectable maximum of number battles (the factory setting is for seven battles per game). As long as a player can place pieces to surround at least one castle, he continues. If a player is eliminated, he may deposit another coin to continue.

In a one-player game, the computer directs an invading armada against the player's castles. The objective is to establish a fort and expand your realm to the entire island. You must destroy the computer's fleet before they reach shore and move their cannons onto the land. In higher levels of game play, the computer cannon fire will leave behind burning rubble, preventing the player from repairing and extending his walls.

Rampart's action is lightning fast. The strategy is exhilarating. The thrill of head-to-head competition is intense.

NOTES

CHAPTER 2

Self-Test

INTRODUCTION

Use the Rampart self-test to check the condition of the game circuitry and controls. You will see the self-test information on the video display and hear the sound test information through the speakers. You do not need any additional equipment to perform the self-test. ❖ You should perform the self-test when you first set up the game, each time you collect the money, or when you suspect game failure. ❖ This chapter shows the screens in the self-test and explains each of the tests. The screens and explanations are arranged in the order they appear in the self-test. Table 2-1 lists all of the self-test screens and their purposes.

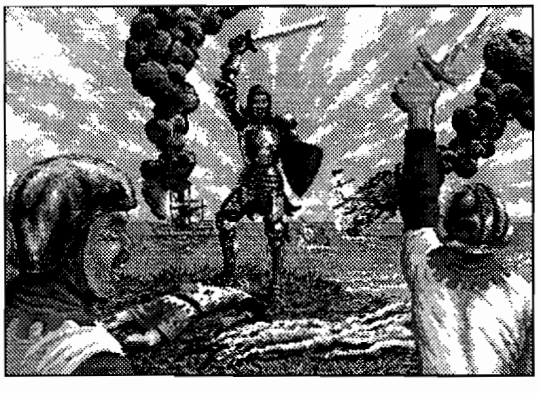

Entering and Exiting the Self-Test

To enter the self-test, turn on the self-test switch on the game PCB. Exit the self-test by switching off the self-test switch.

Select Test Menu

Choose which test or screen you want to see from this menu, shown in Figure 2-1. Move up and down the list by rolling the Trak-Ball; the corresponding test is highlighted in white. Choose the screen by pressing the red PLACE button.

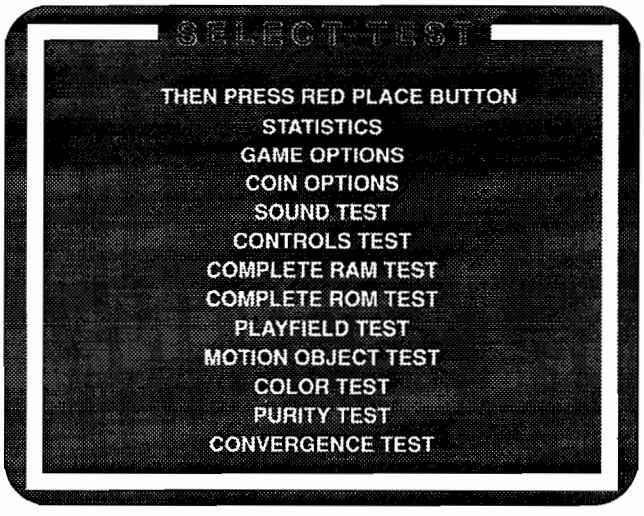

Figure 2-1 Self-Test Menu Screen

Statistics

Use the information shown on the statistics screen, in Figure 2-2, and on the histogram screens to keep track of your game use and maximize your profits. Record the information on the Rampart statistics page in the back of this manual. The statistics are collected from the last time the statistics were cleared. You can clear the statistics by holding down the red ROTATE button and pressing the red PLACE button at the same time.

Press the red PLACE button to leave this screen and go to the histograms.

- *Left Coins* show the number of coins counted in the left coin mechanism.
- *Right Coins* show the number of coins counted in the right coin mechanism.

Table 2-1 Summary of All Self-Test Screens

Screen	Use or Purpose
Statistics Screen	Displays the game statistics.
Game Options Screen	Use to set and check the game options settings.
Coin Options Screen	Use to set and check the coin options settings.
Sound Test Screen	Use to check the audio circuits.
Controls Test Screen	Use to test the player controls.
RAM Test Screen	
Video RAM (looping)	Use to check the video RAM.
Color RAM (looping)	Use to check the color RAM.
All RAM (looping)	Use to check all RAM.
ROM Test Screen	Use to check the program ROMs.
Playfield Test Screen	Use to check the alphanumeric displays.
Motion Object Screen	Use to test the movement and color of game objects.
Color Test Screen	Use to check the video display color circuits.
Purity Test Screen	
Red Color Purity Screen	Use to check the red color purity in the video display.
Green Color Purity Screen	Use to check the green color purity in the video display.
Blue Color Purity Screen	Use to check the blue color purity in the video display.
White Color Purity Screen	Use to check the white color in the video display.
Grey Color Purity Screen	Use to check the grey color in the video display.
White Convergence Screen	Use to check and adjust video display convergence of red, blue, and green.
Violet Convergence Screen	Use to check and adjust video display convergence of red to blue.
Green Convergence Screen	Use to check and adjust video display convergence of red and blue to green.

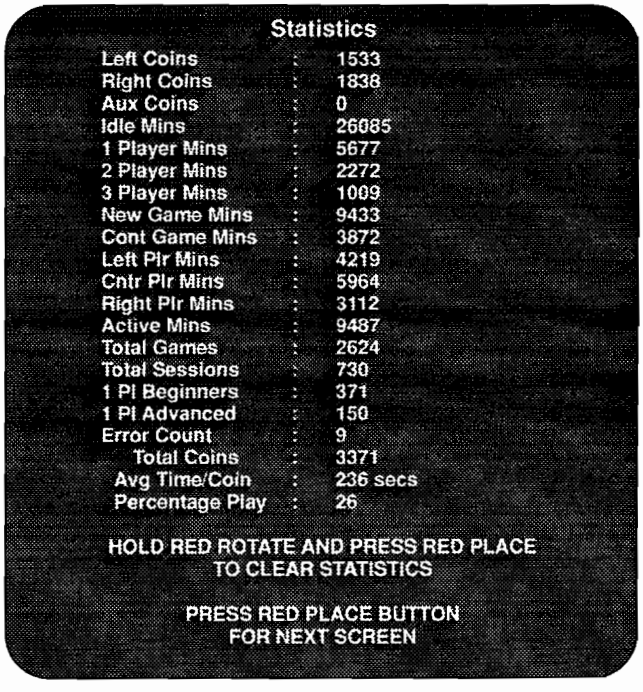

Figure 2-2 Statistics Screen

- *Aux Coins* shows the number of coins counted on the auxiliary coin input.
- *Idle Mins* shows the number of minutes the game was not being played.
- *1 Player/2 Player/3 Player Mins* is the number of minutes the game was played by one, two, or three players.
- *New Game Mins* is the amount of time the game is played *before* continuation.
- *Cont Game Mins* is the amount of time the game is played during "add-a-coin" (continuation).
- *Left/Cntr/Right Plr Mins* is the number of minutes the game was played at the left, center, and right player stations.
- *Active Mins* is the number of minutes the game was being played in any mode.
- *Total Games* is the number of games played (one game per player).
- *Total Sessions* is the number of sessions played. For example, one 3-player game counts as one session.
- *1-Pl Beginners* is the number of 1-player beginner games played.
- *1-Pl Advanced* is the number of 1-player "veteran" games played.
- *Error Count* shows the number of errors counted in the erasable memory. If you have an error count, the statistics may be wrong. If you consistently have errors counted for several weeks, replace the EEROM at 38F.
- *Avg Time/Coin* is the average number of seconds played per coin.
- *Percentage Play* is the amount of time, as a percentage, that the game is played while it is powered on.

Game Options

Check and select the coin options on this screen, shown in Figure 2-3.

To move through the options, roll the Trak-Ball up or down. Change the option in yellow type. The factory

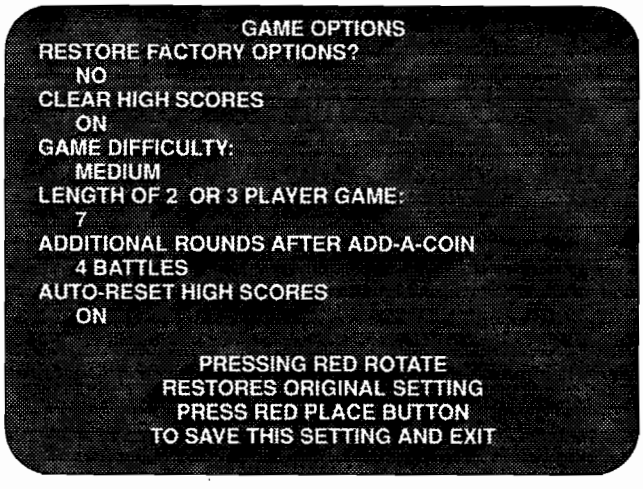

Figure 2-3 Game Options Screen

default settings are shown in green. To change a setting, roll the Trak-Ball right or left. To save the new settings, press the red PLACE button. This returns you to the select test screen. If you want to keep the original setting, although you have changed it, press the red ROTATE button. This brings back the original setting. Use the red PLACE button to exit.

The game option settings with factory defaults are shown in Table 2-2.

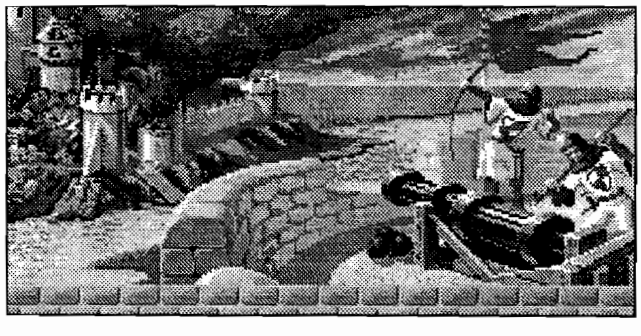

Table 2-2 Game Option Settings

Option	Settings		Explanation
Restore Factory Options	Yes	No ✔	Lets you set all the game options to the factory options or lets you use your own settings. Make sure you set this to *no* to use your own chosen settings.
Clear High Scores	Off	On ✔	Lets you clear the high score table.
Game Difficulty	Easy Hard	Medium ✔ Very Hard	Pre-programmed obstacles and more enemy cannons being fired contribute to increased difficulty.
Length of 2- or 3-Player Game	5, 7 ✔, 10, 15 battles		Lets you adjust the maximum number of rounds (battles) allowed for multi-player games.
Additional Rounds After Add-a-coin	2, 4 ✔, 6, 8		Lets you adjust the additional number of rounds (battles) after an add-a-coin in multi-player games.
Auto-Reset High Scores	Off	On ✔	Automatically resets the high scores to the factory defaults after 2000 games, unless a player has entered his initials within the previous 200 games.

✔ *Manufacturer's recommended settings. These settings are shown in green on the screen.*

Coin Options

Check and select the coin options on this screen, shown in Figure 2-4.

To move through the options, roll the Trak-Ball up or down. Change the option in yellow type. The factory default settings are shown in green. To change a setting, roll the red Midi Trak-Ball right or left. To save the new settings, press the red PLACE button. This returns you to the select test screen. If you want to keep the original setting, although you have changed it, press the red ROTATE button. This brings back the original setting. Use the red PLACE button to exit.

The coin option settings and factory defaults are explained in Table 2-3.

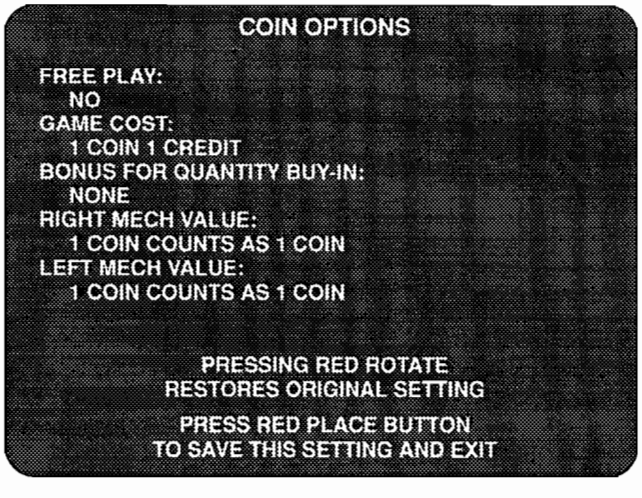

Figure 2-4 Coin Options Screen

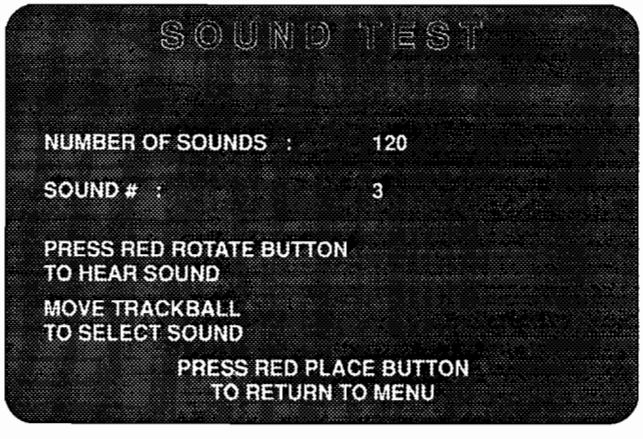

Figure 2-5 Sound Test Screen

Sound Test

The sound test indicates the condition of the sound effects circuit on the game PCB. The sound test screen appears in Figure 2-5.

Use the Trak-Ball to select the sound and press the red ROTATE button to listen to it. Pressing the red PLACE button returns you to the select test menu

Controls Test

The controls test screen is shown in Figure 2-6. Test the coin mechanism switches, control panel buttons, and Midi Trak-Balls. As you use the control, the red control name changes to yellow on the screen. If the name does not change to yellow, check the connections, switches, and mechanism. *Ignore the "RIGHT PLACE ALT" and "RIGHT ROTATE ALT" screen dis-*

Table 2-3 Coin Option Settings

Option	Settings	Explanation
Free Play	No ✔ Yes	Set this to "Yes" for demonstrating the game.
Discount to Continue	No ✔ Yes	Lets you offer a reduced price per credit when players want to continue a game.
Game Cost	1 coin 1 credit ✔ 2 coins 1 credit ... 8 coins 1 credit	Sets the number of coins required for one credit.
Bonus for Quantity Buy-in	None ✔ 2 coins give 1 (extra coin) 3 coins give 1 (extra coin) 3 coins give 2 (extra coins) 4 coins give 1 (extra coin) 4 coins give 2 (extra coins) 4 coins give 3 (extra coins) 5 coins give 1 (extra coin) 5 coins give 2 (extra coins) 5 coins give 3 (extra coins) 6 coins give 1 (extra coin) 6 coins give 2 (extra coins) 6 coins give 3 (extra coins) 7 coins give 1 (extra coin) 7 coins give 2 (extra coins) 7 coins give 3 (extra coins) 8 coins give 1 (extra coin) 8 coins give 2 (extra coins) 8 coins give 3 (extra coins) 9 coins give 1 (extra coin) 9 coins give 2 (extra coins) 9 coins give 3 (extra coins)	Lets you choose various levels of bonus coins or no bonus.
Right Mech Value	1 coin counts as 1 coin ✔ ... 8 coins count as 1 coin	Is the number of coins each coin counts as in the right coin mechanism.
Left Mech Value	1 coin counts as 1 coin ✔ ... 8 coins count as 1 coin	Is the number of coins each coin counts as in the left coin mechanism.

✔ *Manufacturer's recommended settings. These settings are shown in green on the screen.*

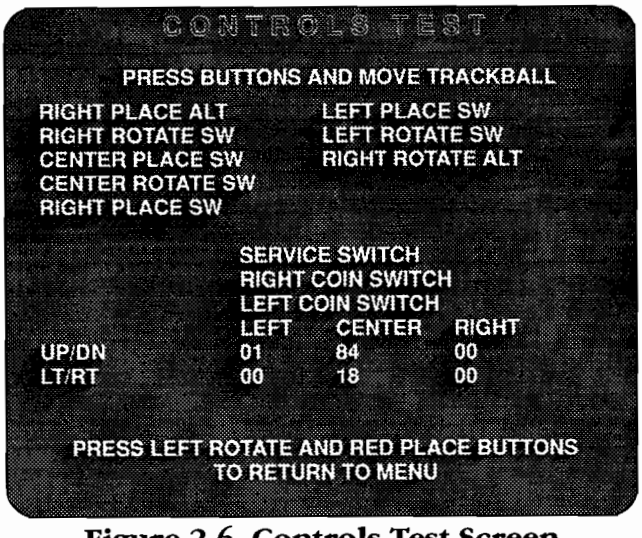

Figure 2-6 Controls Test Screen

plays: they are not applicable to this game. Simultaneously press the red ROTATE and red PLACE buttons to return to the test select screen.

Moving each Trak-Ball causes the yellow hexadecimal numbers to change when you roll it up and down (UP/DN) or left and right (LT/RT). Use these numbers to help correctly orient the Trak-Ball, if you are installing a new one. If the numbers on the screen do not change, check the optical coupler PCBs, connectors, and harnesses for that direction of movement.

Complete RAM Test

Use this selection screen, shown in Figure 2-7, to choose which RAM test you want to perform. Use the different tests according to Table 2-4.

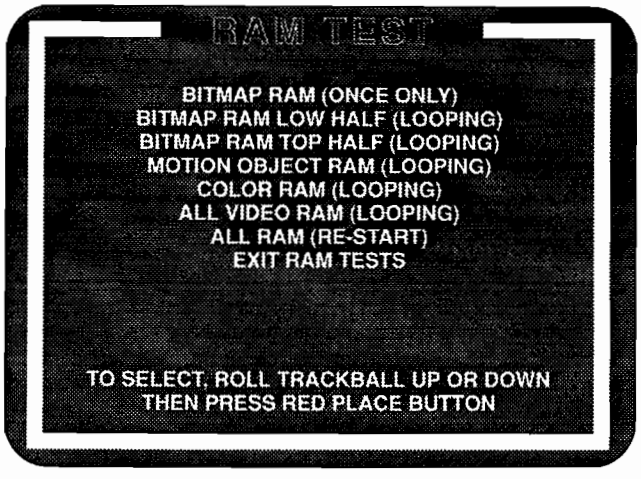

Figure 2-7 RAM Test Menu

If you get an error in any of the RAM tests, see Table 2-5 for more information. If you have serious RAM problems, you may see only a colored screen.

Press the red PLACE button to leave the individual RAM test and return to the RAM test menu screen. Press the red PLACE button once more to return to the test select screen.

Complete ROM Test

The ROM test screen is shown in Figure 2-8. The 0K information appears. If the game has no ROM errors, you see the message *ALL ROMS are OK.*

If the game does have ROM errors, the ROM test screen will remain until the ROM error information is complete. Press the red PLACE button several times to pass the ROM errors. The ROM error test takes a few seconds.

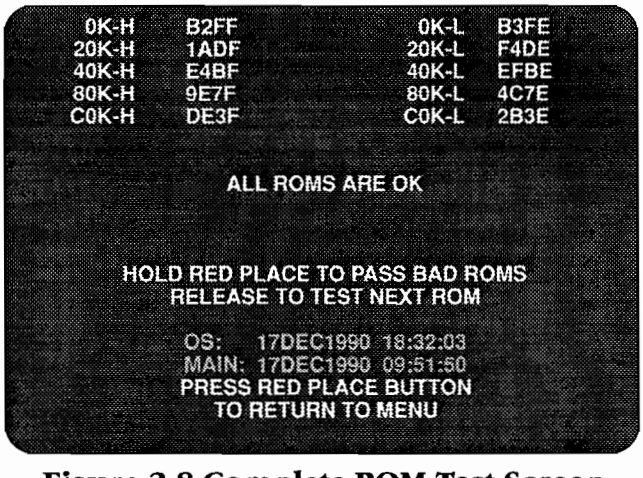

Figure 2-8 Complete ROM Test Screen

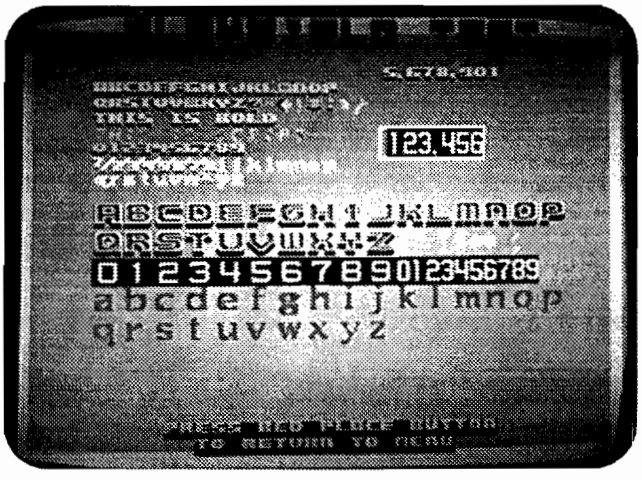

Figure 2-9 Playfield Test Screen

See Table 2-6 for the locations of the ROM errors. Press the red PLACE button to return to the test select screen.

Playfield Test

This test, shown in Figure 2-9, checks the condition of the bitmaps in the game. If you see an error on the screen, this indicates an error with the bitmap display

Table 2-4 When to Run the RAM Tests

Problem	Type of Test	Location of RAMs Tested
Playfield is erratic or looks wrong	Bitmap RAM*	8H, 9H, 10H, and 11H
Motion objects are not working properly or game play is erratic.	Motion object RAM	5N, 6N
Colors look wrong.	Color RAM	4H

**Bitmap RAM (once only) is a thorough test, and takes about 1 minute to run. The "half" tests are significantly faster, but may not find all types of errors.*

Table 2-5 Bad RAM Locations by Error Address

Type of RAM	Address	RAM Location	Data Bits
Playfield RAM	200000 to 21FFFF	11H	0–3
		10H	4–7
		9H	8–11
		8H	12–15
Motion Object RAM	3E0000 to 3E3FFF	6N	0–7
		5N	8–15
Color RAM	3C0000 to 3C07FF	4H	8–15

Table 2-6 Bad ROM Locations by Error Address

Error Address	ROM Location High	Error Address	ROM Location Low
Program ROM 8x1024 Configuration*:			
0K-H	13H	0K-L	13H/J
20K-H	13H	20K-L	13H/J
40K-H	13J	40K-L	13K
80K-H	13K/L	80K-L	13L
C0K-H	13M	C0K-L	13N
Program ROM 2x512 and 2x4096 Configuration*:			
0K-H	13H	0K-L	13H/J
20K-H	13J	20K-L	13K
40K-H	13J	40K-L	13K
80K-H	13J	80K-L	13K
C0K-H	13J	C0K-L	13K

**If you have 8x32-pin ceramic parts in column 13 on your Rampart Game PCB, you have an 8x1024 configuration. If you have 2x28-pin ceramic parts and 2x32-pin plastic parts in column 13 of this board, you have a 2x512 and 2x4096 configuration.*

circuit. Press the red PLACE button to go to the test select screen.

Motion Object Test

The motion object test screen, shown in Figure 2-10, tests the movement and color of various game objects.

Select the test function with the left ROTATE button. Use the Trak-Ball to move objects, change pictures, change object size, change object palette, and to toggle the horizontal flip. If there is an error, check the motion object ROM at 2N; also check the motion object RAM at 5N and 6N (see the RAM test above).

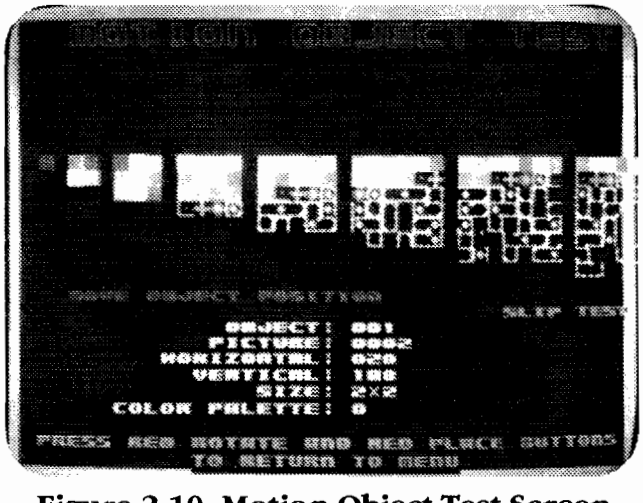

Figure 2-10 Motion Object Test Screen

Press the red PLACE button to move to the next object. Simultaneously press the red ROTATE and red PLACE buttons to go to the test select screen.

Color Test

This test indicates the dynamic range of the video display color circuit. The screen is shown in Figure 2-11.

The left side of the screen should be black, with a grey scale changing to white in the middle. The right half of the screen should be red, green, and blue from top to bottom, each with a color scale from dark to bright, left to right.

If the screen does not match this description, adjust the video display as described in the video display manual.

Return to the test select screen by pressing the red PLACE button.

Color Purity Test

The color purity test has five screens. Each screen is a solid rectangle of color. The first screen is red. The other screens, which you can see by pressing the left ROTATE button, are green, blue, white, and gray.

These screens show the adjustment of the color purity of the video display. Each screen should display a rectangle of color, with no curving at the corners, no unevenness of color, and no lines in the display.

If the screens are not correct, adjust the video display as described in the video display manual.

Return to the test select screen by pressing the red PLACE button.

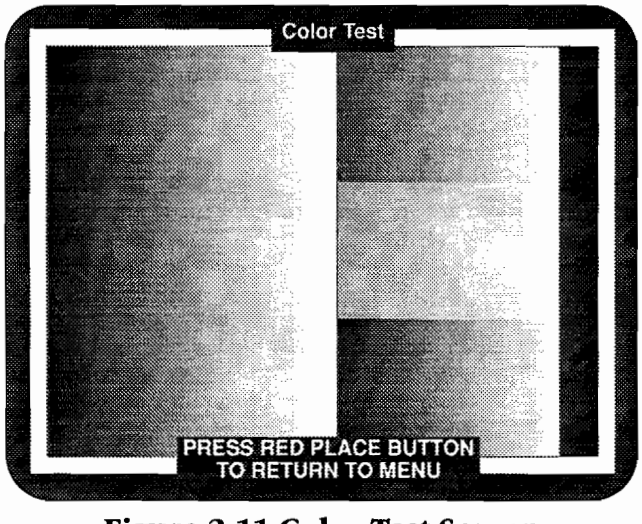

Figure 2-11 Color Test Screen

Convergence Test

The convergence test has three screens: first white, then violet, and finally green. The white screen is shown in Figure 2-13. To see the violet and green screens, press the left ROTATE button. Press the red PLACE button to go to the test select screen.

Check the following on the screens:

- The grid lines should be straight within 3 mm, and the lines should not pincushion or barrel.
- The convergence of the lines on the violet and white screens should be within 2 mm.

If these screens do not meet these criteria, adjust the video display as described in the video display manual.

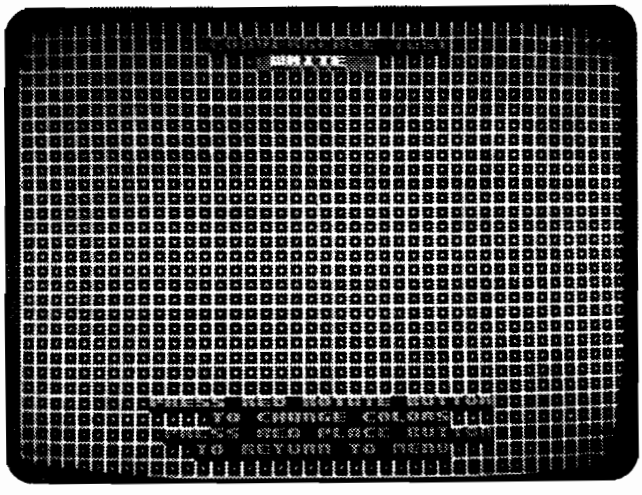

Figure 2-12 Convergence Test Screen

CHAPTER 3

Troubleshooting and Maintenance

This chapter contains troubleshooting tables and repair procedures for your Rampart™ game. The chapter has two parts. The first part contains three troubleshooting tables. The tables contain general troubleshooting information, the voltage levels and test points on the game printed-circuit board, and a list of ROM-caused problems, with specific ROMs to check and replace. The last part of the chapter has information about connecting the video display if it requires separate positive sync and repair information for the Midi Trak-Ball control assembly.

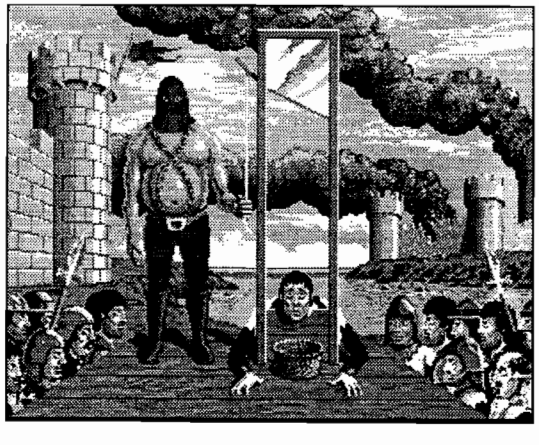

Table 3-1 Troubleshooting Table

Problem	Suggested Action
Coin Mechanism Problem	1. Check the wiring to the coin mechanism. 2. Check the voltage to the + side of the mechanism. 3. Test the coin mechanisms with the sound test screen in the self-test.
Game Play Problem	1. Check the harness and connectors. 2. Perform the self-test. 3. Check the voltage levels on the PCB. See Table 3-2, *Voltage Inputs and Test Points.* 4. Check *What ROM Problems Look Like,* Table 3-3, for specific ROM problems.
Trak-Ball Control Problem	1. Has the Trak-Ball been lubricated with the correct type of lubricant? If not, lubricate it as shown in Figure 4-2 . 2. Check the harnesses and connectors. 3. Check the optical coupler PCBs on the control. 4. If you took the control apart, have you reassembled it correctly? 5. Make sure all the parts on the control are in good repair. Repair or replace parts.
Sound Problem	1. Is the speaker volume turned up? 2. Check the voltage on the JAMMA connector. 3. Check the wiring from the PCB to the speaker. 4. Check the voltage level to the PCB. See Table 3-2, *Voltage Inputs and Test Points.* 5. Replace the speaker.
Video Display Problem	
Screen is dark.	1. Is the game plugged in? 2. Is the game turned on? 3. Are the connections good? 4. Is the line fuse good? 5. Is the display brightness turned up? 6. Are the solder connections on the line filter and transformer good? 7. Is the connector on the PCB tightly connected? 8. Check all of the items below. If you answer *no* to any question, you have a problem with the video display, not with the game circuitry. See your video display service manual. a. Do you have power to the video display? b. Are the video display's filaments lit? c. Do you have high voltage to the video display? 9. Are the voltage levels to the video display PCB correct? (Power voltage is 100 VAC or 110 VAC, depending on the type of video display. Video signal voltage is 0.5 to 3.5 Volts.) 10. If the level is not correct, check the connectors and the harness.
Display area wavers or is too small.	1. Do you have correct power voltage to the video display PCB? 2. Do you have correct high voltage to the video display?
Picture is wavy.	1. Is the video ground connected to the display? 2. Are the sync inputs connected properly?
Picture is upside down.	Switch the horizontal or vertical yoke wires on the display.
Convergence, purity or color problems.	Use the screens in the self-test to adjust the video display. Use the adjustment procedures in your video display manual.
Picture is not centered.	Use the centering procedures in your video display manual.

Repairing the Video Display

The video display frame in this game is designed to be used with both horizontal- and vertical-mounting displays, as well as 19- and 25-inch displays.

Removing the Video Display

If you have a problem with the video display, first run the self-test procedure to narrow down the cause. To make adjustments to the video display, unlock the service door on the rear of the cabinet.

If you want to repair the video display, remove it from the game by following this procedure:

1. Turn the game power off and wait two minutes. Unplug the power cord for safety.

Table 3-2 Voltage Inputs and Test Points on the PCB

Voltage	Test Point or LED	Source and Purpose
+5 ± 0.25 VDC	+5V1	Logic power from the switching power supply.
	CR8 LED	Lights when 5 V is applied to the PCB and the reset (RST) jumper is open.
	CR5 LED	Lights when the +12 V supply is good.
	CR4 LED	Lights when the –5 V supply is good.
+12V	+V0P (pin 4 of LM324)	+12 V from the switching power supply. Positive supply for the analog circuitry.
–5V	–V0P (pin 11 of LM324)	–5V from the switching power supply (if connected). Negative supply for the analog circuitry.

Table 3-3 What ROM Problems Look Like

Problem	ROM Causing the Problem	Check the ROM at:
Program works, but the motion object is wrong.	Graphics	2N
Garbage on screen; program doesn't work. or game program is erratic.	Processor Program ROM 0	13C 13H, 13K/L
No sound or erratic sound.	Audio ROM: Audio ADPCM	 2D, 1D

2. While you wait, unlock the top service door on the rear of the cabinet.
3. Remove the three screws that attach the attraction shield retainer, and remove retainer, shield, and attraction film. Then remove the display shield, cardboard bezels, and cleats in front of the display.

WARNING

High Voltage

The video display contains lethal high voltages. To avoid injury, do not service this display until you observe all precautions necessary for working on high-voltage equipment.

X-Radiation

This video display is designed to minimize X-radiation. However, to avoid possible exposure to soft X-radiation, never modify the high-voltage circuitry.

Implosion Hazard

The cathode-ray tube (CRT) may implode if struck or dropped. The shattered glass from the tube may cause injury up to six feet away. Use care when handling the display and when removing it from the game cabinet. Also, wear gloves to protect your hands from the sheet-metal edges.

4. Remove the four nuts and washers that secure the video display.
5. Discharge the high voltage from the cathode-ray tube (CRT). The display assembly contains a circuit for discharging the high voltage to ground when power is removed. However, to make certain, always discharge the display as follows:
   a. Attach one end of a solid 18-gauge wire to a well-insulated screwdriver or wooden handle.
   b. Attach the other end of the wire to an earth ground.
   c. Quickly touch the blade end of the screwdriver to the CRT anode by sliding it under the anode cap.
   d. Wait two minutes and repeat part c.
6. Disconnect the harness connectors from the video display.
7. Pull the video display assembly out of the cabinet. Be extremely careful.

Replacing the Video Display

Perform the following procedure to replace the video display in the cabinet.

1. Carefully lift the video display into the cabinet.
2. Install the nuts that hold the video display assembly.

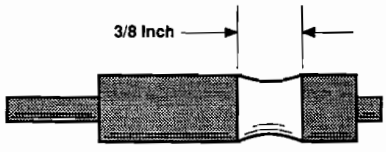

Figure 3-1 Excessive Shaft Wear

3. Connect the power and signal harnesses to the video display.
   If you replace the CRT and yoke together, adjust the brightness, size, and centering as described in the video display service manual. Check the purity and convergence according to that manual, but adjust both only if required.
4. Install the video display shield, bezel, and cleats. Replace the attraction film, shield, and retainer.
5. Lock the rear service door on the cabinet.

Midi Trak-Ball Control

Routine maintenance of the Midi Trak-Ball control consists mainly of inspecting the roller shafts for excessive wear and periodically lubricating the bearings.

Removing the Midi Trak-Ball

1. Open the control panel, and disconnect the harness at the six-pin connector.
2. Remove the four nuts and carriage bolts that secure the Midi Trak-Ball assembly to the control panel.

Disassembling the Midi Trak-Ball

To disassemble the Midi Trak-Ball after it has been removed from the control panel, remove the six screws that secure the upper and lower frames (see Figure 4-3). Lift off the upper frame. The Midi Trak-Ball can now be disassembled.

Inspecting the Midi Trak-Ball

1. With the Midi Trak-Ball disassembled, inspect the roller shafts and the idler shaft for excessive wear (see Figure 3-1). If the wear band exceeds 3/8 inch, replace the roller shaft as described in steps 2–6, or replace the idler shaft as described in steps 7–10.
2. To replace a roller shaft, first remove the roller shaft from the lower frame.
3. Remove the metal encoding wheel by loosening the socket-head screw, flat washer, and split-lock washer. Remove the encoding wheel and bearings.
4. Remount the bearings and encoding wheel on a new roller shaft.
5. Tighten the encoding wheel by inserting a 1/8-inch-diameter pin or screwdriver through the hole in the shaft. Tighten the socket-head screw with an Allen wrench.
6. Reinstall the roller shaft in the lower frame.
7. To replace the idler shaft, first remove the idler shaft from the lower frame.
8. Remove the bearings from the ends of the idler shaft.
9. Remount the bearings on a new idler shaft.
10. Reinstall the idler shaft in the lower frame.

Lubricating the Midi Trak-Ball

Lubrication of the Midi Trak-Ball assembly should be performed every three months or 6,000 credits (as counted on the coin counter). To lubricate, place two drops of a light-duty oil, such as 3-In-One oil, on each of the six ball bearings shown in Figure 4-2.

Replacing the Coupler PCB

1. To remove the Coupler PCB, first disassemble the Midi Trak-Ball. Lift the PCB out of its slot. Carefully disconnect the red connector and remove the PCB.
2. To reinstall the Coupler PCB, place the PCB in the slot in the lower frame, and reconnect the red connector.

NOTE

When you reinstall the Coupler PCB, make sure that the metal encoding wheel is not bent or damaged. Be sure the encoding wheel turns freely between the two halves of the radial optical coupler.

Reassembling the Midi Trak-Ball

1. Install the upper frame of the Midi Trak-Ball over the assembly. Be sure that each Couple PCB is engaged in the slots of the upper frame.
2. Replace the six screws that secure the upper and lower frames together.
3. Remount the Midi Trak-Ball assembly to the control panel using the four nuts and carriage bolts.
4. Reconnect the six-pin connector of the harness.

ROMs and RAMs

If you have think you have bad ROMs or RAMs, preform the ROM or RAM test in the self-test. If you have a ROM problem, see Table 3-3.

CHAPTER 4

Parts Illustrations

This chapter provides information you need to order replacement parts for your Rampart™ three-player game. Common hardware parts, such as screws, nuts, washers, and so on, are included in these parts illustrations.

❖ When you order parts, give the part number, part name, the number of this manual, and the serial number of your game. With this information, we can fill your order rapidly and correctly. We hope this will create less downtime and more profit from your games.

❖ Atari Games Customer Service phone numbers are listed on the inside front cover of this manual.

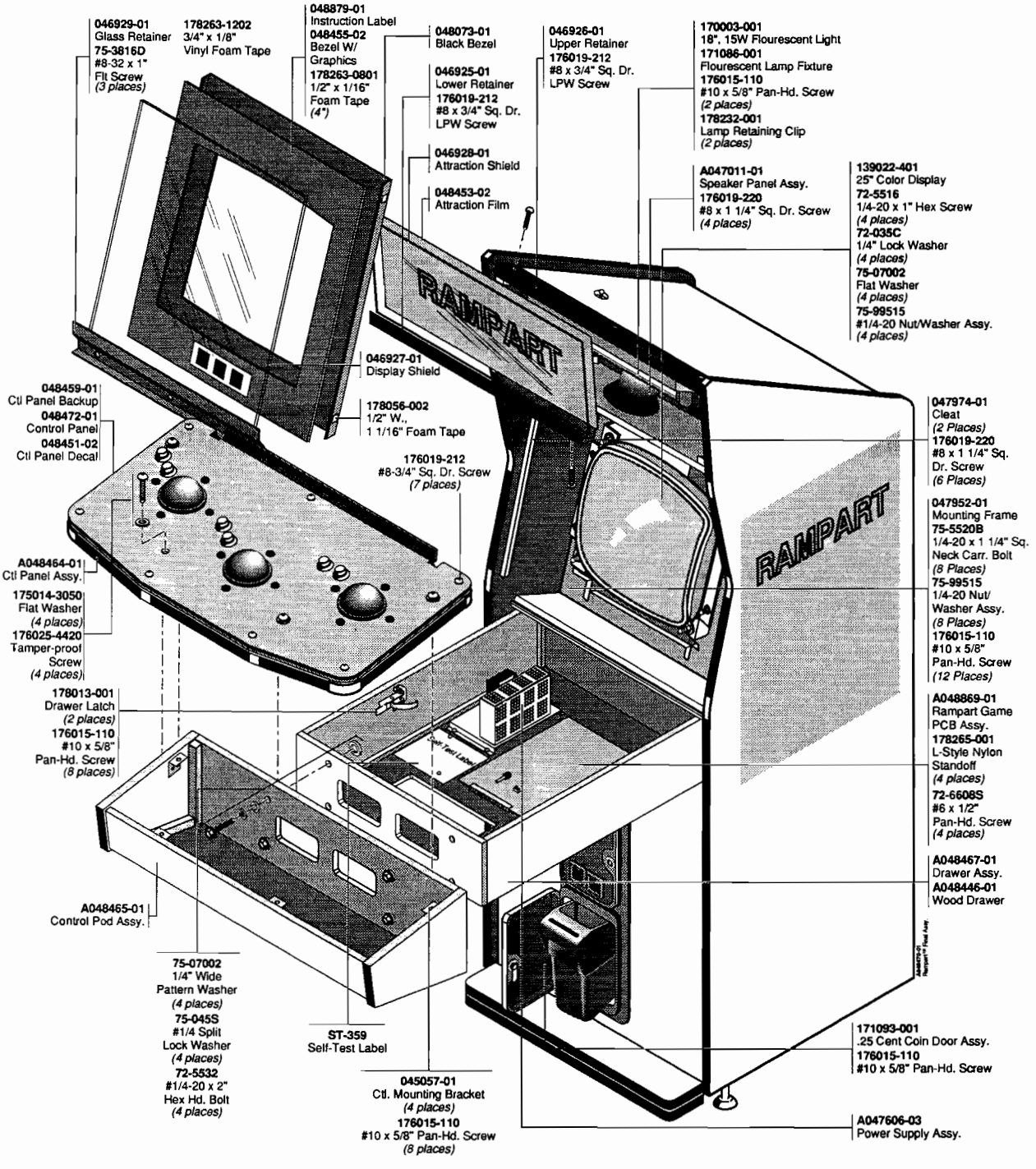

Figure 4-1 Cabinet-Mounted Assemblies
A048470-01 B

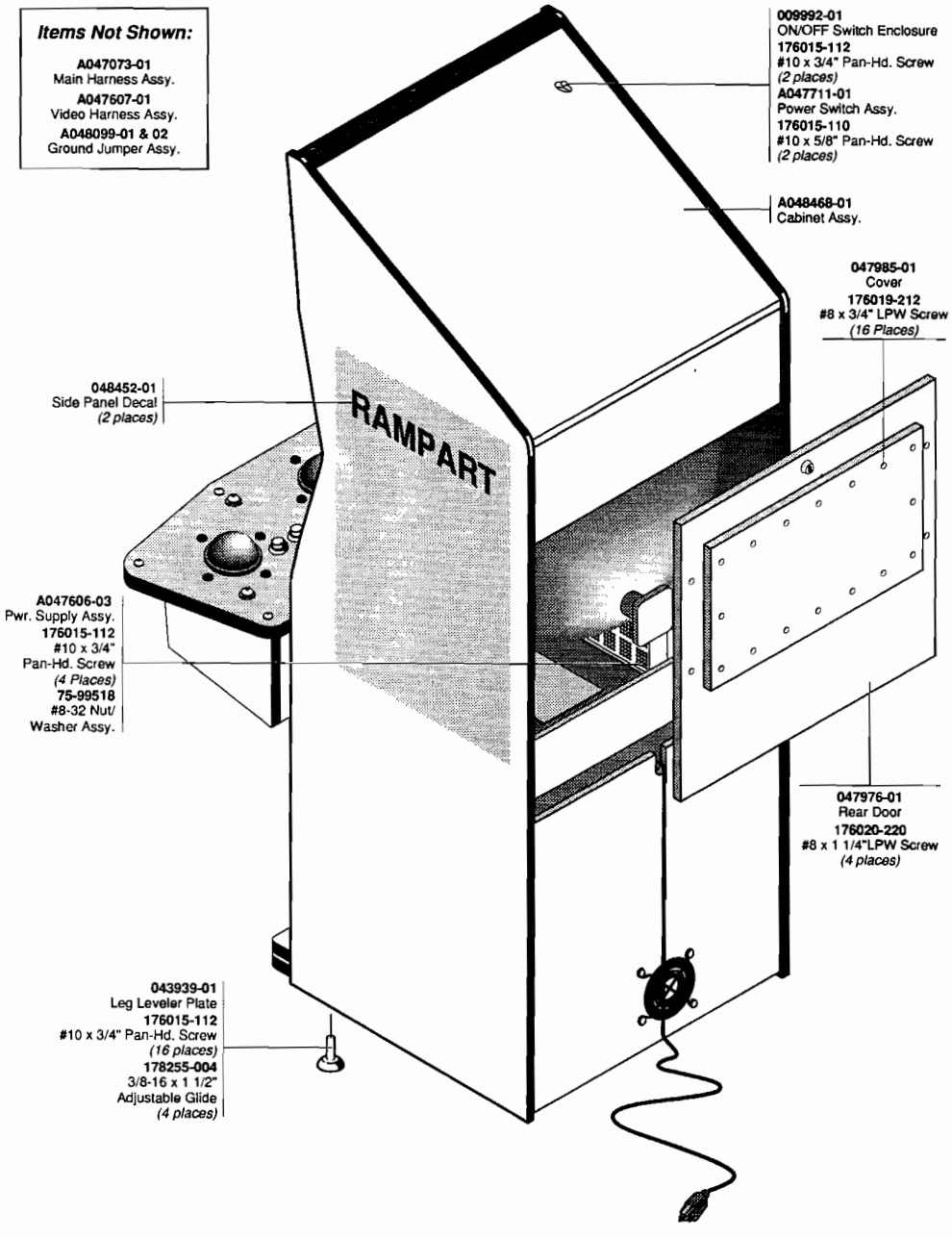

Figure 4-1 Cabinet-Mounted Assemblies
A048470-01 B

Not Shown:
A048474-01
Control Harness Assy

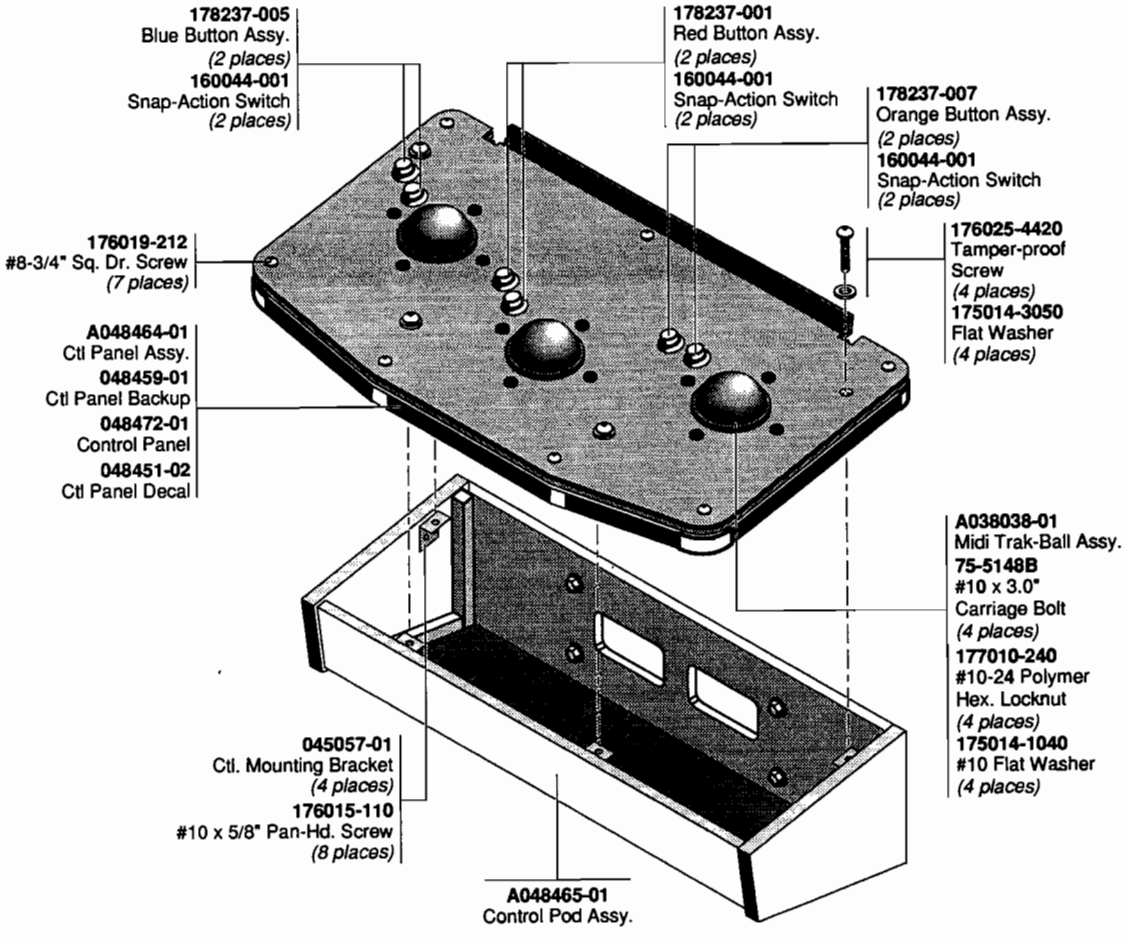

Figure 4-2 Control Panel Assembly A048464-01 B

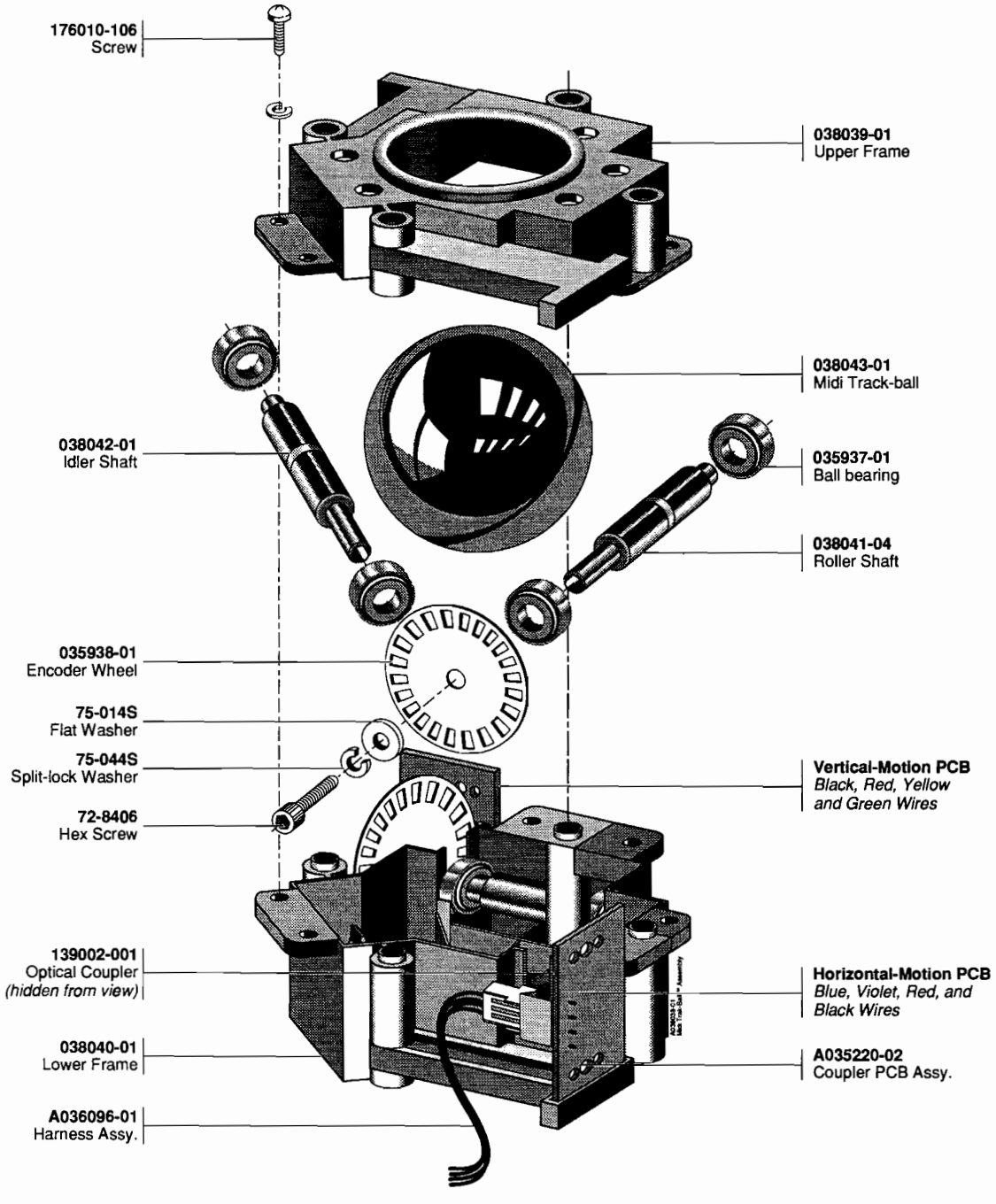

Figure 4-3 Midi Trak-Ball Assembly
A038038-01 F

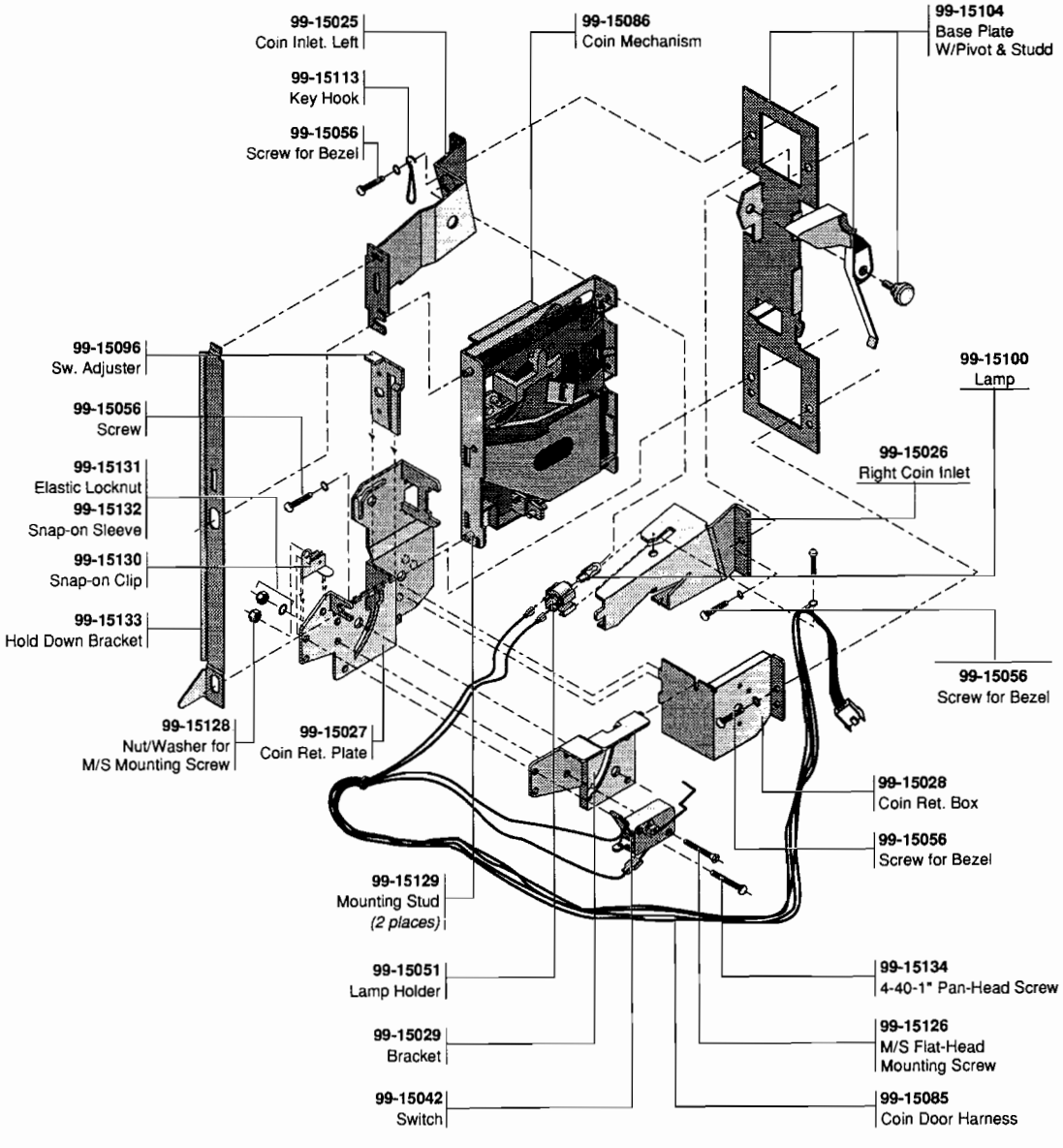

Figure 4-4 Coin Controls, Inc. Coin Door Assembly 171093-001

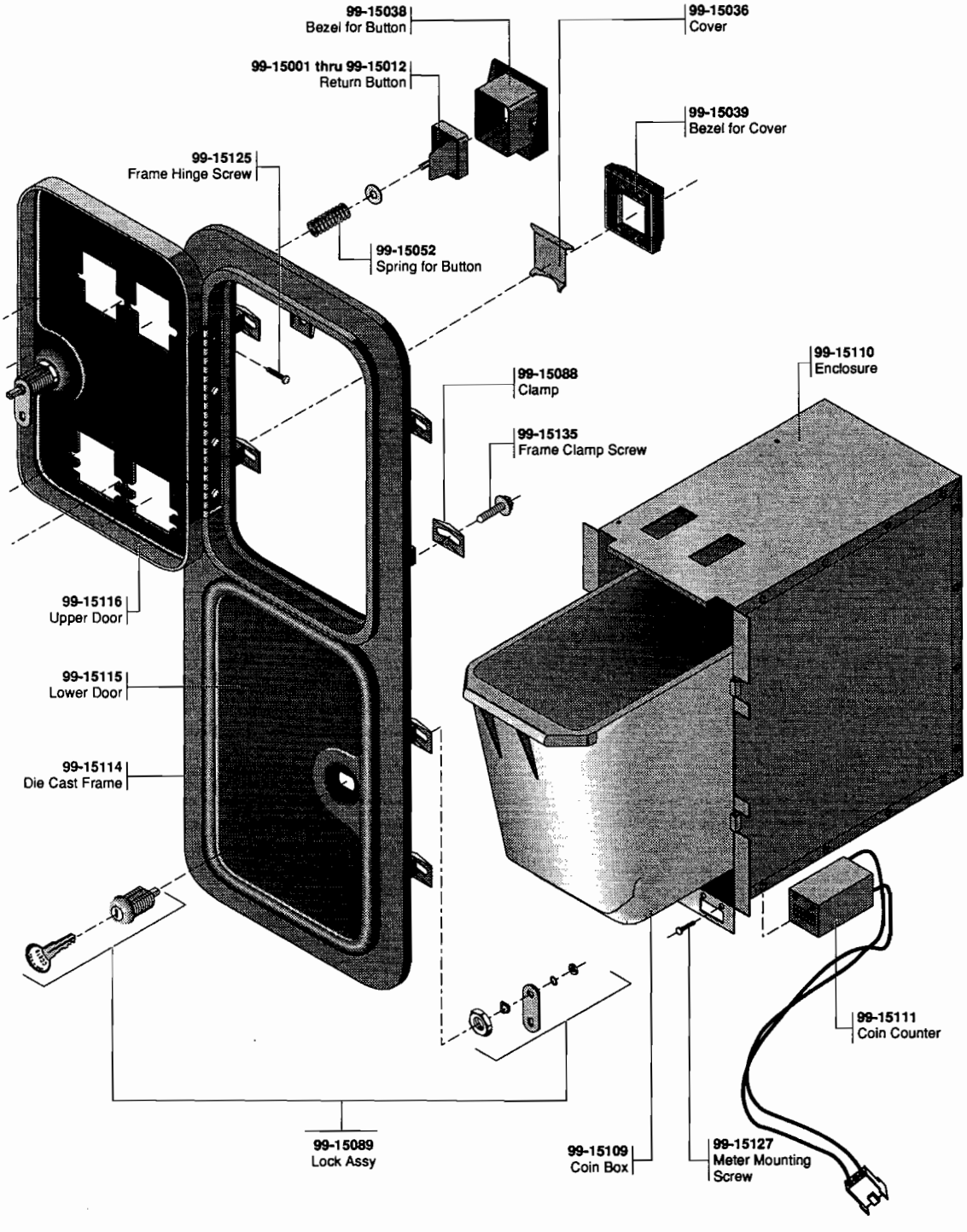

Figure 4-4 Coin Controls, Inc. Coin Door Assembly 171093-001

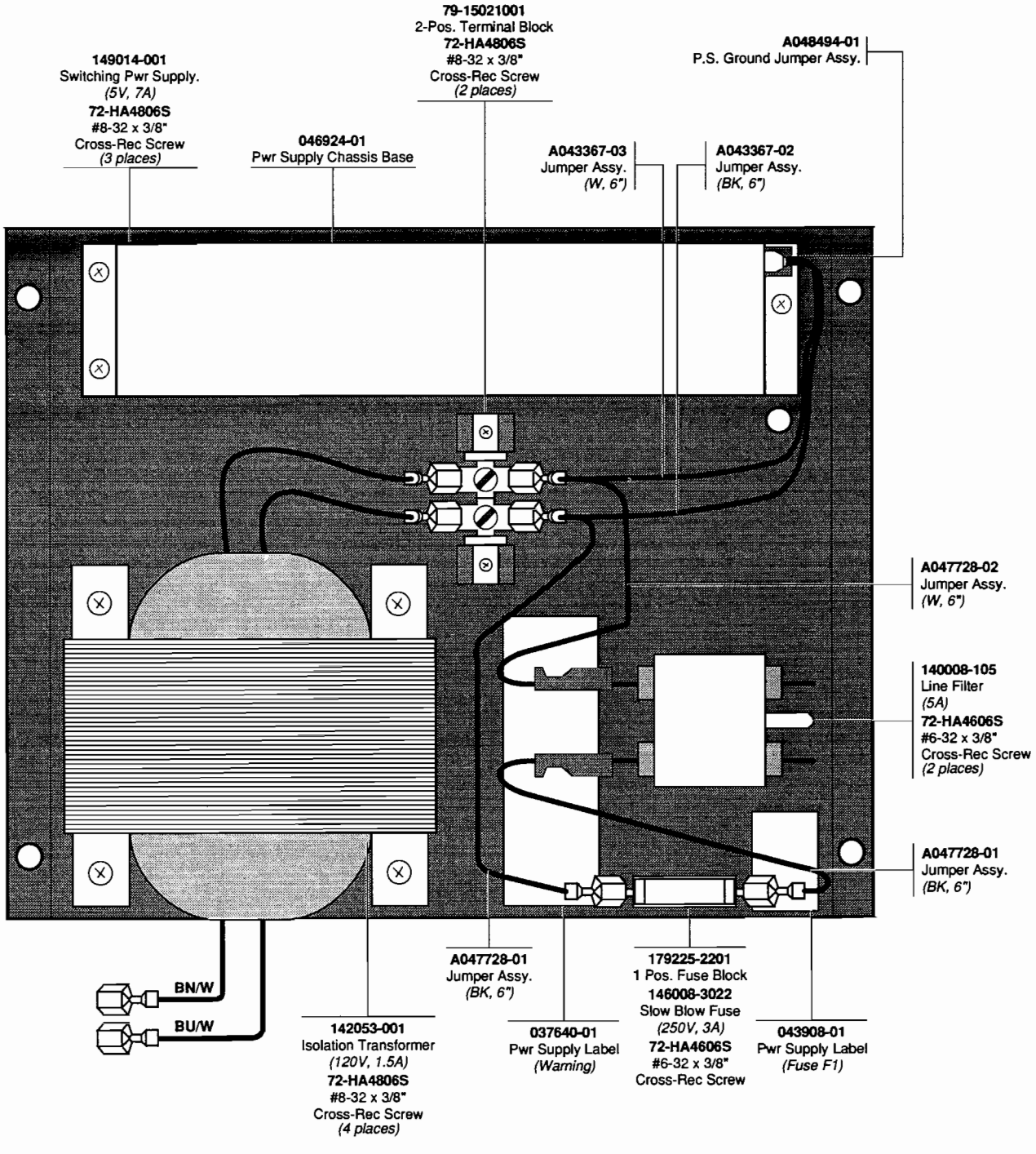

Figure 4-5 JAMMA Power Supply Assembly
A047606-03 E

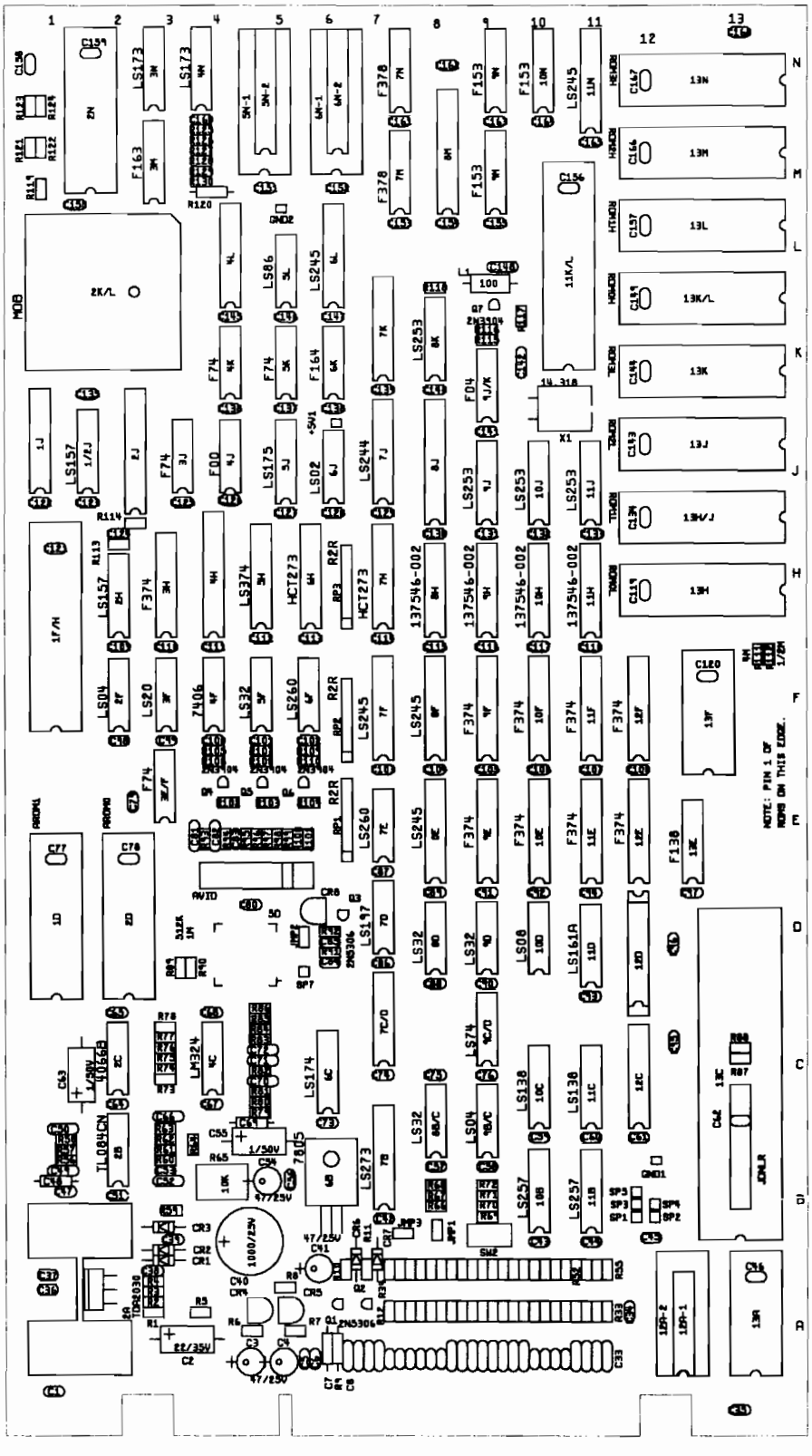

Figure 4-6 Rampart Game PCB Assembly (3-Player Version)
A048868-01 D

Rampart Game PCB Assembly (3-Player Version)
Parts List

Designator	Description	Part No.
1D	Socket, 32 Pin, .600-Inch	179257-032
1F/H	Socket, 40 Pin, .600-Inch	179257-040
1J	Socket, 20 Pin, .300-Inch	179259-020
2D	Socket, 32 Pin, .600-Inch	179257-032
2J	Socket, 24 Pin, .300-Inch	179259-024
2K/L	Socket, 84 Pin, Plcc	179237-084
2N	Socket, 32 Pin, .600-Inch	179257-032
4H	Socket, 24 Pin, .300-Inch	179259-024
4L	Socket, 20 Pin, .300-Inch	179259-020
5N-1, 6N-1	Socket, 28 Pin, .600-Inch *Note: Acceptable substitute is RAM 8Kx8, 70 nsec, part no. 137535-003*	179257-028
7C/D	Socket, 18 Pin, .300-Inch	179259-018
7K	Socket, 20 Pin, .300-Inch	179259-020
8J, 8M	Socket, 24 Pin, .300-Inch	179259-024
11K/L	Socket, 40 Pin, .600-Inch	179257-040
12A- 1	Socket, 24 Pin, .600-Inch	179257-024
12C	Socket, 20 Pin, .300-Inch	179259-020
12D	Socket, 24 Pin, .300-Inch	179259-024
13A	Socket, 24 Pin, .600-Inch	179257-024
13C	Socket, 64 Pin, .900-Inch	179256-064
13F	Socket, 24 Pin, .600-Inch	179257-024
13H, 13H/J, 13J, 13K, 13K/L, 13L, 13M, 13N	Socket, 32 Pin, .600-Inch	179257-032
(2A)	Nut/Washer Assy, #6-32	75-99516
(2A)	Screw, Pan Hd, X-Rec, #6-32 x 3/8L	72-1606S
1/2J	Integrated Circuit, 74LS157	137029-001
1D	Integrated Circuit, EPROM	136082-1008
1F/H	Integrated Circuit, Lb	137536-001
1J	Integrated Circuit, GAL16V8	136082-1000
2A	Integrated Circuit, TDA2030	137301-001
2B	Integrated Circuit, TL084CN	137579-001
2C	Integrated Circuit, 4066B	137580-001
2D	Integrated Circuit, EPROM	136082-1007
2F	Integrated Circuit, 74LS04	137009-001
2H	Integrated Circuit, 74LS157	137029-001
2K/L	Integrated Circuit, MOB	137593-001
2N	Integrated Circuit, EPROM	136082-1009
3E/F	Integrated Circuit, 74F74	137436-001
3F	Integrated Circuit, 74LS20	137060-001
3H	Integrated Circuit, 74F374	137420-001
3J	Integrated Circuit, 74F74	137436-001
3M	Integrated Circuit, 74F163	137345-001
3N	Integrated Circuit, 74LS173	137529-001
4C	Integrated Circuit, LM324	137582-001
4F	Integrated Circuit, 7406	137052-001
4H	Integrated Circuit, RAM, 2Kx8 s, 35 nsec	137534-001
4J	Integrated Circuit, 74F00	137327-001
4K	Integrated Circuit, 74F74	137436-001
4L	Integrated Circuit, GAL16V8	136082-1001
4N	Integrated Circuit, 74LS173	137529-001
5F	Integrated Circuit, 74LS32	137019-001
5H	Integrated Circuit, 74LS374	137144-001
5J	Integrated Circuit, 74LS175	137123-001
5K	Integrated Circuit, 74F74	137436-001
5L	Integrated Circuit, 74LS86	137079-001
5N-1	Integrated Circuit, RAM, 8Kx8, 85 nsec	137535-008
6B	Integrated Circuit, 7805	137596-001
6C	Integrated Circuit, 74LS174	137122-001
6F	Integrated Circuit, 74LS260	137332-001
6H	Integrated Circuit, 74HCT273	137655-001
6J	Integrated Circuit, 74LS02	137042-001
6K	Integrated Circuit, 74F164	137568-001
6L	Integrated Circuit, 74LS245	137134-001
6N-1	Integrated Circuit, RAM, 8Kx8, 85 nsec	137535-008
7B	Integrated Circuit, 74LS273	137040-001
7C/D	Integrated Circuit, YM2413	137671-001
7D	Integrated Circuit, 74LS197	137240-001
7E	Integrated Circuit, 74LS260	137332-001
7F	Integrated Circuit, 74LS245	137134-001
7H	Integrated Circuit, 74HCT273	137655-001
7J	Integrated Circuit, 74LS244	137038-001
7K	Integrated Circuit, GAL16V8	136082-1002
7M, 7N	Integrated Circuit, 74F378	137612-001
8B/C, 8D	Integrated Circuit, 74LS32	137019-001
8E, 8F	Integrated Circuit, 74LS245	137134-001
8H	Integrated Circuit, Dram, 4464, 64Kx4, 120N	137546-002
8J	Integrated Circuit, GAL20V8	136082-1003
8K	Integrated Circuit, 74LS253	137135-001
8M	Integrated Circuit, GAL20V8	136082-1004
9B/C	Integrated Circuit, 74LS04	137009-001
9C/D	Integrated Circuit, 74LS74	137023-001
9D	Integrated Circuit, 74LS32	137019-001
9E, 9F	Integrated Circuit, 74F374	137420-001
9H	Integrated Circuit, Dram, 4464, 64Kx4, 120N	137546-002

Rampart Game PCB Assembly (3-Player Version)
Parts List, Continued

Designator	Description	Part No.
9J	Integrated Circuit, 74LS253	137135-001
9J/K	Integrated Circuit, 74F04	137437-001
9M, 9N	Integrated Circuit, 74F153	137492-001
10B	Integrated Circuit, 74LS257	137136-001
10C	Integrated Circuit, 74LS138	137177-001
10D	Integrated Circuit, 74LS08	137012-001
10E, 10F	Integrated Circuit, 74F374	137420-001
10H	Integrated Circuit, Dram, 4464, 64Kx4, 120N	137546-002
10J	Integrated Circuit, 74LS253	137135-001
10N	Integrated Circuit, 74F153	137492-001
11B	Integrated Circuit, 74LS257	137136-001
11C	Integrated Circuit, 74LS138	137177-001
11D	Integrated Circuit, 74LS161 A	137045-001
11E, 11F	Integrated Circuit, 74F374	137420-001
11H	Integrated Circuit, Dram, 4464, 64Kx4, 120N	137546-002
11J	Integrated Circuit, 74LS253	137135-001
11K/L	Integrated Circuit, SOS	137550-001
11N	Integrated Circuit, 74LS245	137134-001
12A-1	Integrated Circuit, Leta	137304-2002
12C	Integrated Circuit, GAL16V8	136082-1006
12D	Integrated Circuit, SLAPSTIC	137412-118
12E, 12F	Integrated Circuit, 74F374	137420-001
13A	Integrated Circuit, Leta	137304-2002
13C	Integrated Circuit, 68000, 8MHz, Plas	137289-003
13E	Integrated Circuit, 74F138	137521-001
13F	Integrated Circuit, 200 nsec	137648-200
13H	Integrated Circuit, EPROM	136082-1030
13H/J	Integrated Circuit, Mrom, 4 Meg	136082-1032
13K/L	Integrated Circuit, EPROM	136082-1031
13L	Integrated Circuit, Mrom, 4 Meg	136082-1033
C2	Capacitor, 22 µF, 35 V, Electrolytic	124000-226
C3, C4	Capacitor, 47 µF, 25 V, Electrolytic, Radial	123015-476
C5, C6	Capacitor, .1 µF, 50 V, +80%–20%, Ceramic	122002-104
C7	Capacitor, .22 µF, 50 V, Ceramic	122017-224
C8, C9	Capacitor, 100 pF, 100 V, ±5%, Ceramic	122016-101
C10	Capacitor, .001 µF, 50 V, +80%–20%, Ceramic	122002-102
C11	Capacitor, 100 pF, 100 V, ±5%, Ceramic	122016-101
C12-C17	Capacitor, .1 µF, 50 V, +80%–20%, Ceramic	122002-104
C18-C25	Capacitor, .01 µF, 50 V, +80%–20%, Ceramic	122002-103
C26-C29	Capacitor, .1 µF, 50 V, +80%–20%, Ceramic	122002-104
C30-C33	Capacitor, .01 µF, 50 V, +80%–20%, Ceramic	122002-103
C34,C36-C39	Capacitor, .1 µF, 50 V, +80%–20%, Ceramic	122002-104
C40	Capacitor, 1000 µF, 25 V, Electrolytic, Radial	123003-108
C41	Capacitor, 47 µF, 25 V, Electrolytic, Radial	123015-476
C42-C47	Capacitor, .1 µF, 50 V, +80%–20%, Ceramic	122002-104
C48	Capacitor, .0022 µF, 50 V, Ceramic	122015-222
C49	Capacitor, .001 µF, 50 V, +80%–20%, Ceramic	122002-102
C51	Capacitor, .1 µF, 50 V, +80%–20%, Ceramic	122002-104
C52	Capacitor, 270 pF, 100 V, ±5%, Ceramic	122016-271
C53	Capacitor, .033 µF, 50 V, ±10%, Ceramic	122015-333
C54	Capacitor, 47 µF, 25 V, Electrolytic, Radial	123015-476
C55	Capacitor, 1 µF, 50 V, Electrolytic	124001-105
C56-C62	Capacitor, .1 µF, 50 V, +80%–20%, Ceramic	122002-104
C63	Capacitor, 1 µF, 50 V, Electrolytic	124001-105
C64, C65, C67, C68	Capacitor, .1 µF, 50 V, +80%–20%, Ceramic	122002-104
C66	Capacitor, .001 µF, 50 V, +80%–20%, Ceramic	122002-102
C69	Capacitor, .0068 µF, 50 V, Ceramic	122015-682
C70	Capacitor, .01 µF, 50 V, +80%–20%, Ceramic	122002-103
C71	Capacitor, .001 µF, 50 V, +80%–20%, Ceramic	122002-102
C72	Capacitor, .001 µF, 50 V, +80%–20%, Ceramic	122002-102
C73-C80	Capacitor, .1 µF, 50 V, +80%–20%, Ceramic	122002-104
C81, C82	Capacitor, .001 µF, 50 V, +80%–20%, Ceramic	122002-102
C83-C141	Capacitor, .1 µF, 50 V, +80%–20%, Ceramic	122002-104
C142	Capacitor, 100 pF, 100 V, ±5%, Ceramic	122016-101
C143-C147	Capacitor, .1 µF, 50 V, +80%–20%, Ceramic	122002-104

Rampart Game PCB Assembly (3-Player Version)
Parts List, Continued

Designator	Description	Part No.
C148	Capacitor, 100 pF, 100 V, ±5%, Ceramic	122016-101
C149-C157, C159-C167	Capacitor, .1 µF, 50 V, +80%–20%, Ceramic	122002-104
CR1-CR3	Diode, 1N4001	131048-001
CR4, CR5	Diode, MV5053, Light Emitting	131027-002
CR6, CR7	Diode, 1N4001	131048-001
CR8	Diode, MV5053, Light Emitting	131027-002
GND1,GND2	Test Point	179051-001
HS1	Heat Sink, TDA2030	178190-016
JMP1, JMP2	Connector, 2 Ckt, Header, .100 Ctr	179048-002
L1	Inductor, 100 µH	141024-001
Q1-Q3	Transistor, 2N5306	133033-001
Q4-Q7	Transistor, 2N3904	133041-001
R1	Resistor, 1.5 K Ω, ±5%, 1/8 W	110027-152
R2	Resistor, 1 K Ω, ±5%, 1/8 W	110027-102
R3	Resistor, 30 K Ω, ±5%, 1/8 W	110027-303
R4	Resistor, 220, ±5%, 1/8 W	110027-221
R5	Resistor, 1.5 K Ω, ±5%, 1/8 W	110027-152
R6	Resistor, 470 Ω, ±5%, 1/8 W	110027-471
R7	Resistor, 1 K Ω, ±5%, 1/8 W	110027-102
R8	Resistor, 20 K Ω, ±5%, 1/8 W	110027-203
R9	Resistor, 0 Ω, ±5%, 1/4 W	110005-001
R10, R11	Resistor, 1 K Ω, ±5%, 1/8 W	110027-102
R12-R29	Resistor, 470 Ω, ±5%, 1/8 W	110027-471
R30-R33	Resistor, 10 K Ω, ±5%, 1/8 W	110027-103
R34-R39	Resistor, 1 K Ω, ±5%, 1/8 W	110027-102
R40-R45	Resistor, 10 K Ω, ±5%, 1/8 W	110027-103
R47	Resistor, 10 Ω, ±5%, 1/8 W	110027-100
R48, R49	Resistor, 10 K Ω, ±5%, 1/8 W	110027-103
R50-R55	Resistor, 1 K Ω, ±5%, 1/8 W	110027-102
R56, R57	Resistor, 12 K Ω, ±5%, 1/8 W	110027-123
R58	Resistor, 15 K Ω, ±5%, 1/8 W	110027-153
R59	Resistor, 1.5 K Ω, ±5%, 1/8 W	110027-152
R60, R61	Resistor, 20 K Ω, ±5%, 1/8 W	110027-203
R62	Resistor, 5.1 K Ω, ±5%, 1/8 W	110027-512
R63	Resistor, 15 K Ω, ±5%, 1/8 W	110027-153
R64	Resistor, 20 K Ω, ±5%, 1/8 W	110027-203
R65	Potentiometer, 10 K Ω, Vert, w/Knob	119020-103
R66-R68	Resistor, 10 Ω, ±5%, 1/8 W	110027-100
R69	Resistor, 10 K Ω, ±5%, 1/8 W	110027-103
R70-R72	Resistor, 470 Ω, ±5%, 1/8 W	110027-471
R73	Resistor, 7.5 K Ω, ±5%, 1/8 W	110027-752
R74	Resistor, 15 K Ω, ±5%, 1/8 W	110027-153
R75, R76	Resistor, 30 K Ω, ±5%, 1/8 W	110027-303
R77	Resistor, 15 K Ω, ±5%, 1/8 W	110027-153
R78	Resistor, 7.5 K Ω, ±5%, 1/8 W	110027-752
R79	Resistor, 20 K Ω, ±5%, 1/8 W	110027-203
R80	Resistor, 15 K Ω, ±5%, 1/8 W	110027-153
R81	Resistor, 30 K Ω, ±5%, 1/8 W	110027-303
R82	Resistor, 20 K Ω, ±5%, 1/8 W	110027-203
R83	Resistor, 2.2 K Ω, ±5%, 1/8 W	110027-222
R84, R85	Resistor, 4.7 K Ω, ±5%, 1/8 W	110027-472
R86	Resistor, 2.2 K Ω, ±5%, 1/8 W	110027-222
R87, R88	Resistor, 1 K Ω, ±5%, 1/8 W	110027-102
R90	Resistor, 10 Ω, ±5%, 1/8 W	110027-100
R91	Resistor, 220, ±5%, 1/8 W	110027-221
R92	Resistor, 100 K Ω, ±5%, 1/8 W	110027-104
R93-R95	Resistor, 470 Ω, ±5%, 1/8 W	110027-471
R96	Resistor, 100 Ω, ±5%, 1/8 W	110027-101
R97	Resistor, 10 Ω, ±5%, 1/8 W	110027-100
R98	Resistor, 100 Ω, ±5%, 1/8 W	110027-101
R99	Resistor, 10 Ω, ±5%, 1/8 W	110027-100
R100	Resistor, 100 Ω, ±5%, 1/8 W	110027-101
R101	Resistor, 10 Ω, ±5%, 1/8 W	110027-100
R102-R104	Resistor, 15, ±5%, 1/8 W	110027-150
R105	Resistor, 2.4 K Ω, ±5%, 1/8 W	110027-242
R106	Resistor, 1 K Ω, ±5%, 1/8 W	110027-102
R107	Resistor, 2.4 K Ω, ±5%, 1/8 W	110027-242
R108, R109	Resistor, 1 K Ω, ±5%, 1/8 W	110027-102
R110	Resistor, 2.4 K Ω, ±5%, 1/8 W	110027-242
R112, R113	Resistor, 10 Ω, ±5%, 1/8 W	110027-100
R114	Resistor, 4.7 K Ω, ±5%, 1/8 W	110027-472
R115	Resistor, 100 Ω, ±5%, 1/8 W	110027-101
R116, R117	Resistor, 10 K Ω, ±5%, 1/8 W	110027-103
R118	Resistor, 100 Ω, ±5%, 1/8 W	110027-101
R119	Resistor, 10 Ω, ±5%, 1/8 W	110027-100
R121-R128	Resistor, 1 K Ω, ±5%, 1/8 W	110027-102
R130	Resistor, 10 Ω, ±5%, 1/8 W	110027-100
RP1-RP3	Res, R2R	118016-001
SW2	Switch, Slide, SPDT	160040-001
2A	Thermal Compound	78-16001
5D	Integrated Circuit, MSM6295 Surface-Mount	137607-001

CHAPTER 5

Schematic Diagrams

This chapter contains the schematics diagrams for your Rampart™ game PCB. The game wiring diagram is also included

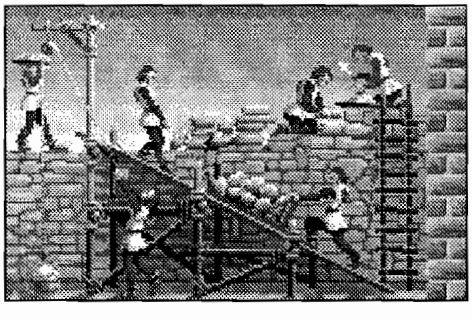

in this chapter. The Rampart 3-player game PCB assembly drawing is illustrated in Chapter 4 of this manual.

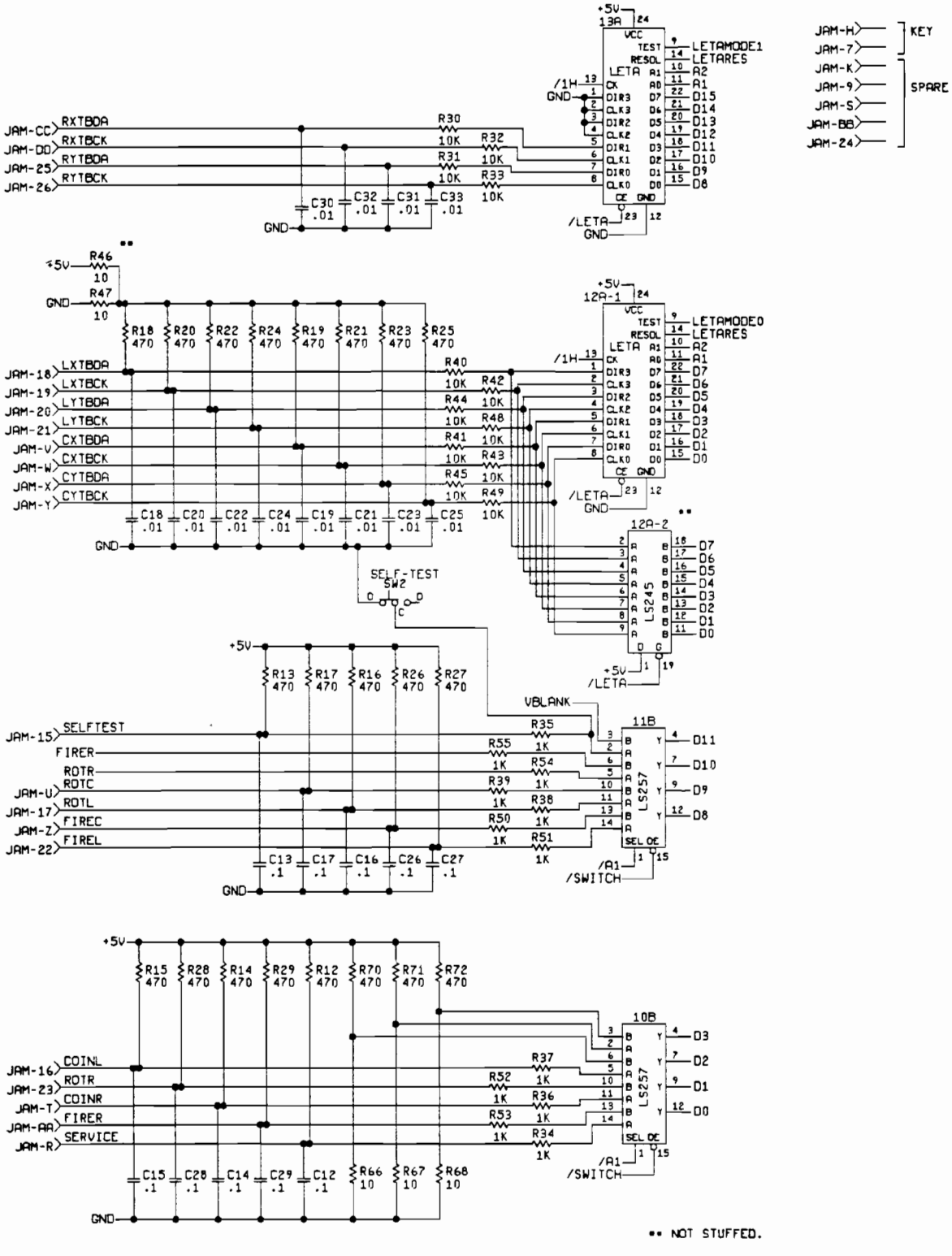
JAM-H
JAM-7
KEY
JAM-K
JAM-9
JAM-S
JAM-BB
JAM-24
SPARE
13A
12A-1
12A-2
11B
10B
LS245
LS257
LETAMODE1
LETAMODE0
LETARES
/1H
/LETA
/A1
/SWITCH
SELF-TEST
SW2
VBLANK
JAM-CC RXTBDA
JAM-DD RXTBCK
JAM-25 RYTBDA
JAM-26 RYTBCK
JAM-18 LXTBDA
JAM-19 LXTBCK
JAM-20 LYTBDA
JAM-21 LYTBCK
JAM-V CXTBDA
JAM-W CXTBCK
JAM-X CYTBDA
JAM-Y CYTBCK
JAM-15 SELFTEST
FIRER
ROTR
JAM-U ROTC
JAM-17 ROTL
JAM-Z FIREC
JAM-22 FIREL
JAM-16 COINL
JAM-23 ROTR
JAM-T COINR
JAM-AA FIRER
JAM-R SERVICE
+5V
GND
•• NOT STUFFED.

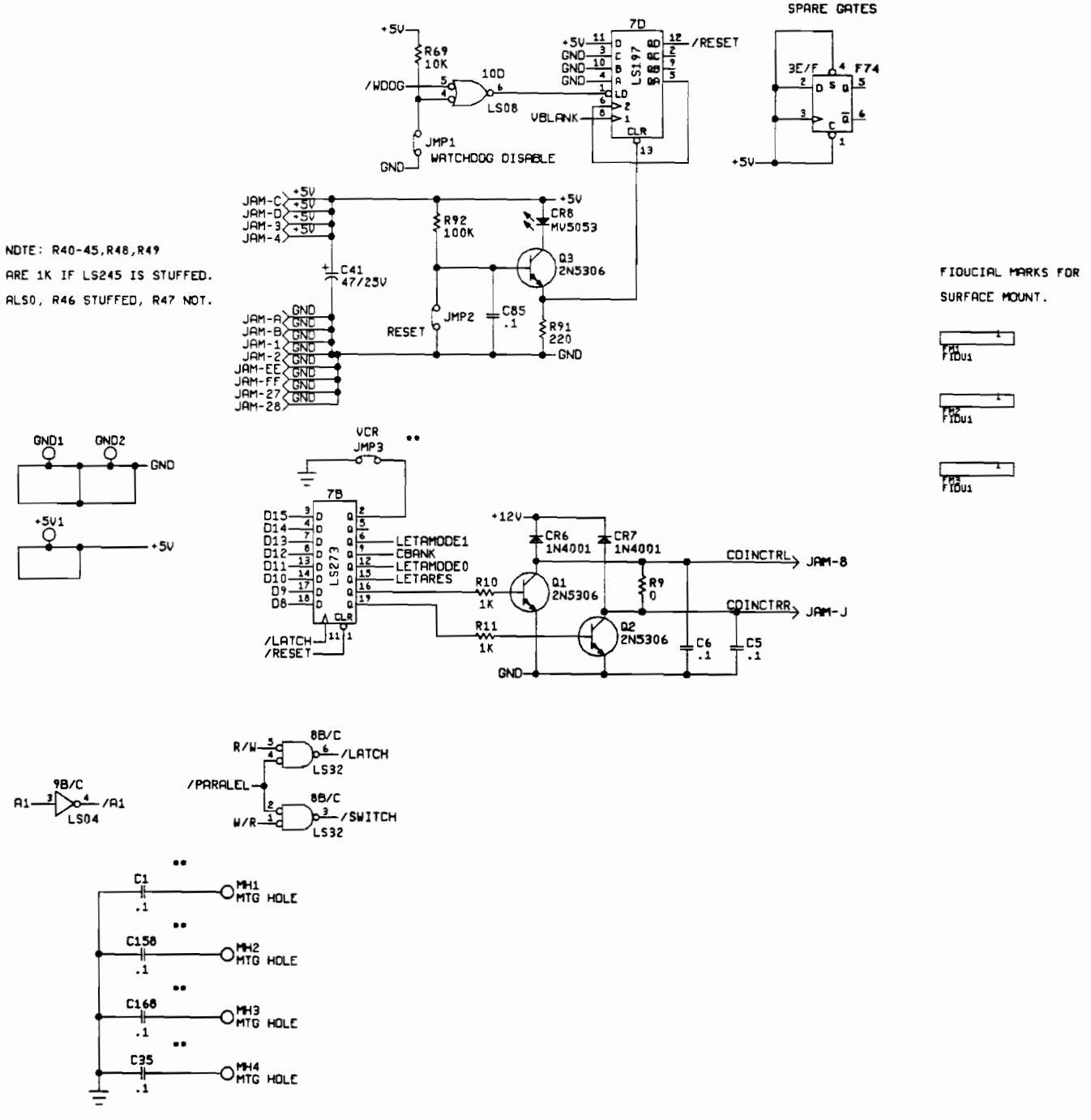

Figure 5-1 Rampart™ Game PCB Assembly Schematic Diagram

048868-01 D

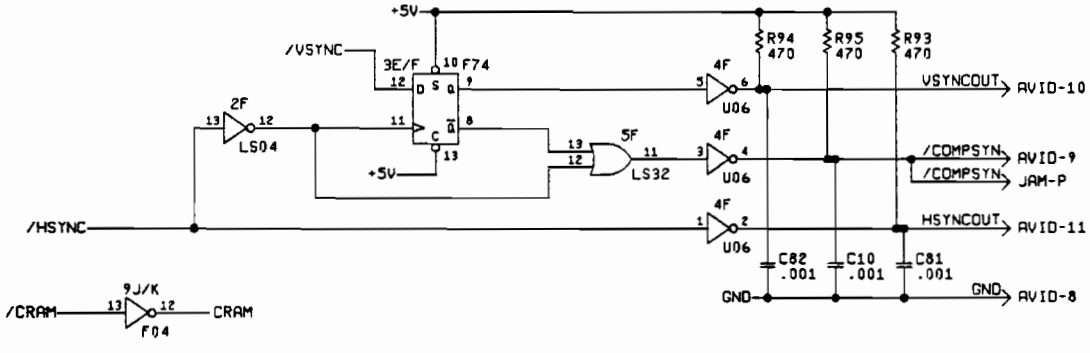
+5V
/VSYNC
3E/F
F74
2F
LS04
+5V
5F
LS32
4F
U06
R94 470
R95 470
R93 470
VSYNCOUT
AVID-10
/COMPSYN
AVID-9
/COMPSYN
JAM-P
/HSYNC
HSYNCOUT
AVID-11
C82 .001
C10 .001
C81 .001
GND
GND
AVID-8
9J/K
/CRAM
CRAM
F04

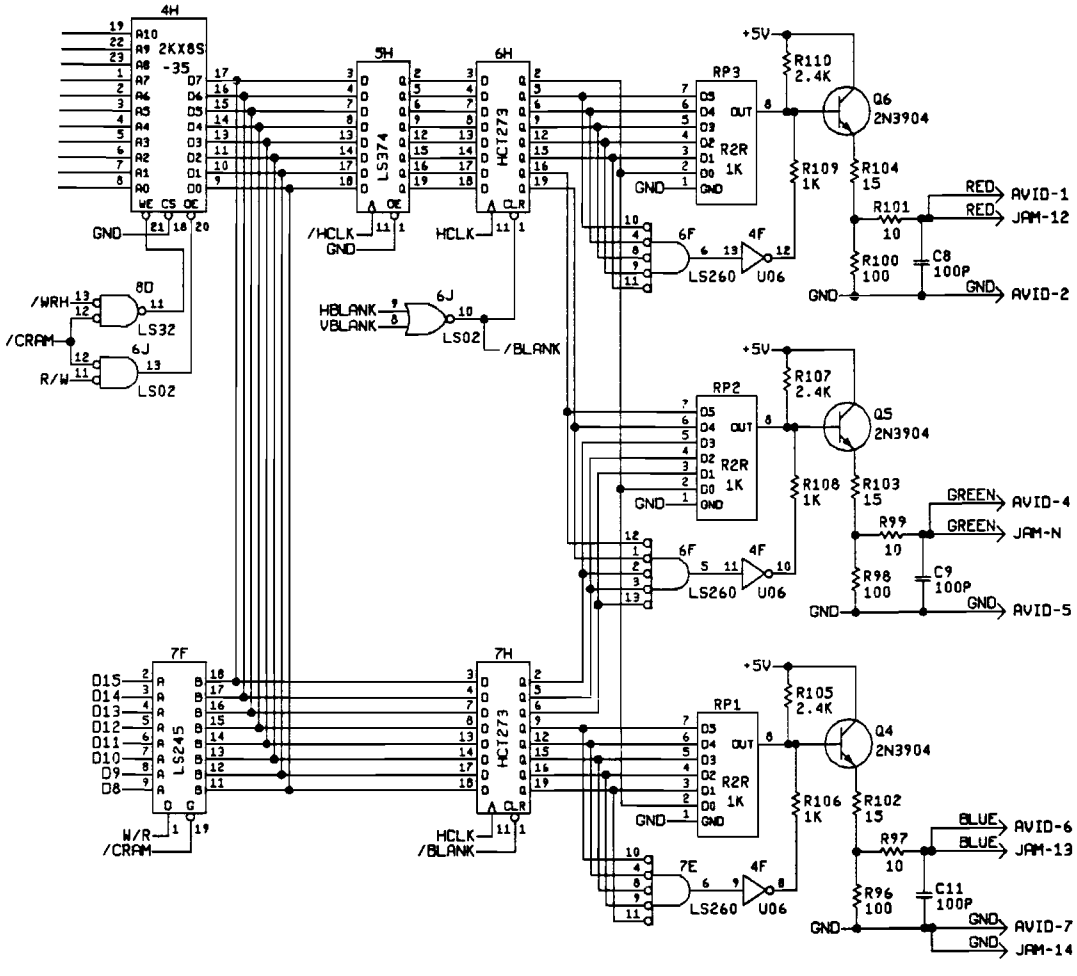

Figure 5-1 Rampart™ Game PCB Assembly Schematic Diagram

048868-01 D

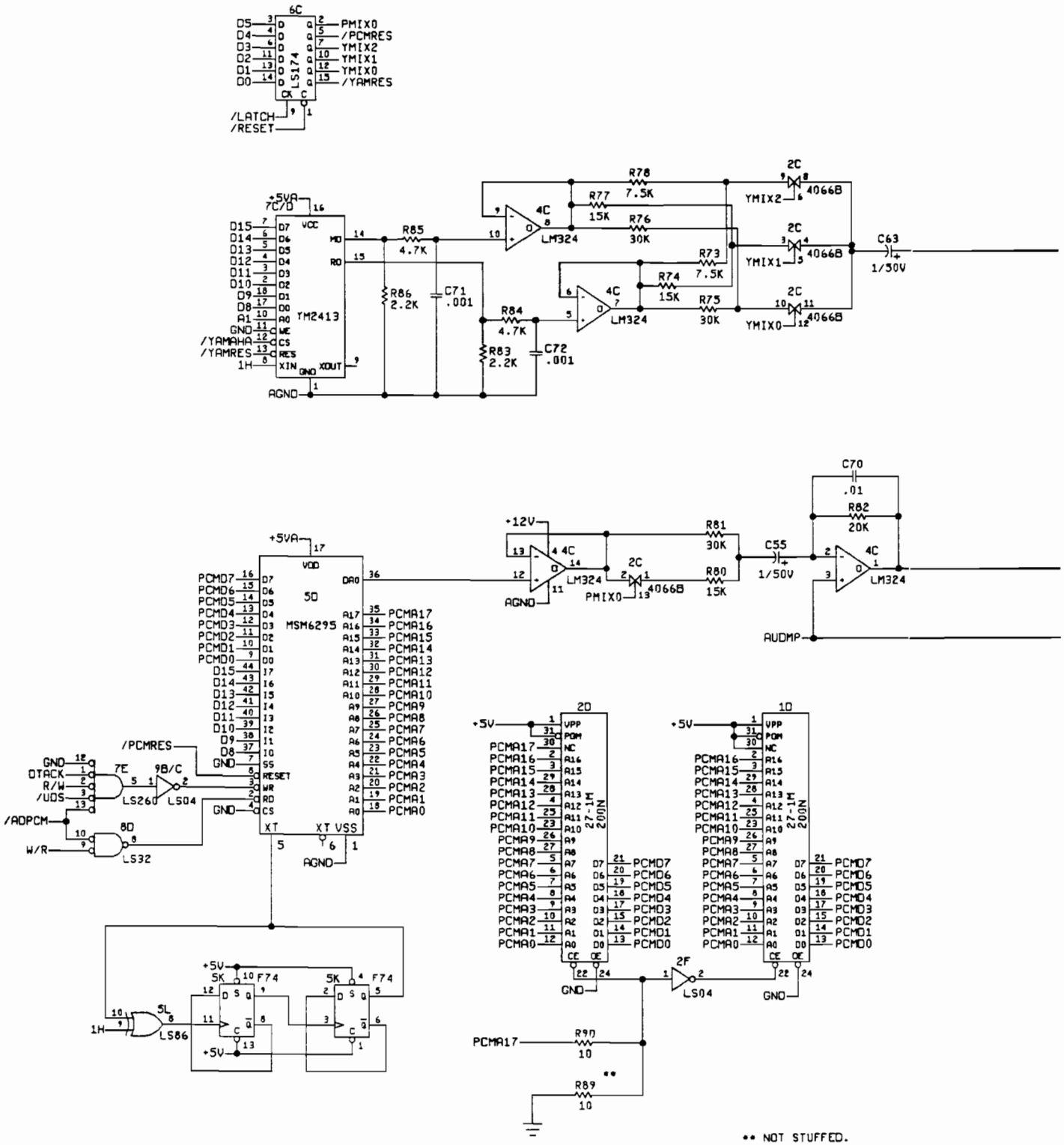
6C
LS174
PMIX0
/PCMRES
YMIX2
YMIX1
YMIX0
/YAMRES
/LATCH
/RESET
+5VA
7C/D
YM2413
/YAMAHA
/YAMRES
1H
AGND
R85 4.7K
R86 2.2K
C71 .001
R84 4.7K
R83 2.2K
C72 .001
4C
LM324
R78 7.5K
R77 15K
R76 30K
R73 7.5K
R74 15K
R75 30K
2C
4066B
YMIX2
YMIX1
YMIX0
C63 1/50V
C70 .01
R82 20K
+12V
R81 30K
R80 15K
C55 1/50V
AUDMP
5D
MSM6295
PCMD7
PCMD6
PCMD5
PCMD4
PCMD3
PCMD2
PCMD1
PCMD0
PCMA17
PCMA16
PCMA15
PCMA14
PCMA13
PCMA12
PCMA11
PCMA10
PCMA9
PCMA8
PCMA7
PCMA6
PCMA5
PCMA4
PCMA3
PCMA2
PCMA1
PCMA0
/PCMRES
GND
DTACK
R/W
/UDS
/ADPCM
W/R
7E
9B/C
LS260
LS04
8D
LS32
5L
LS86
5K
F74
2D
1D
27-1M 200N
2F
R90 10
R89 10
PCMA17
** NOT STUFFED.

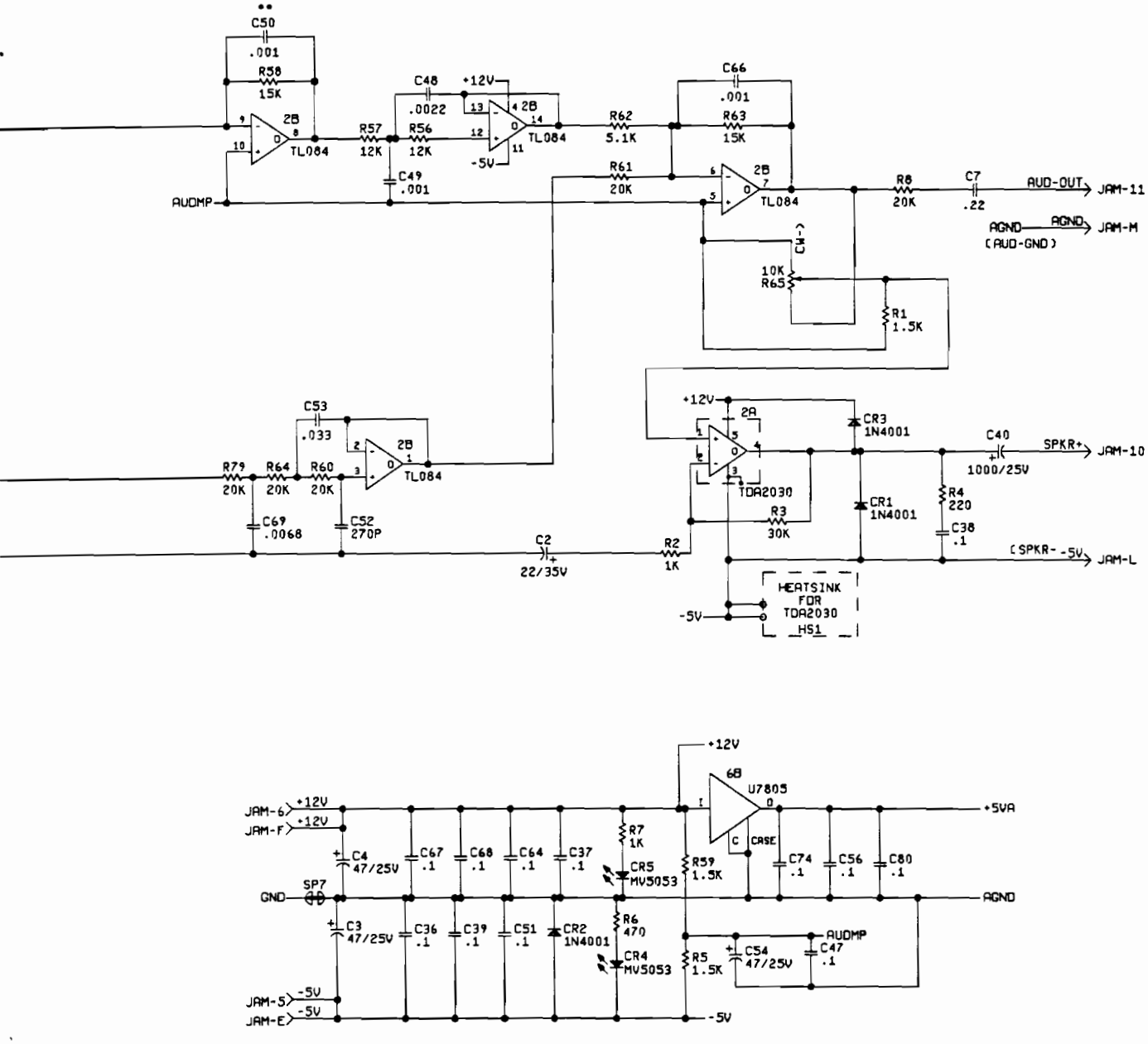

Figure 5-1 Rampart™ Game PCB Assembly Schematic Diagram

048868-01 D

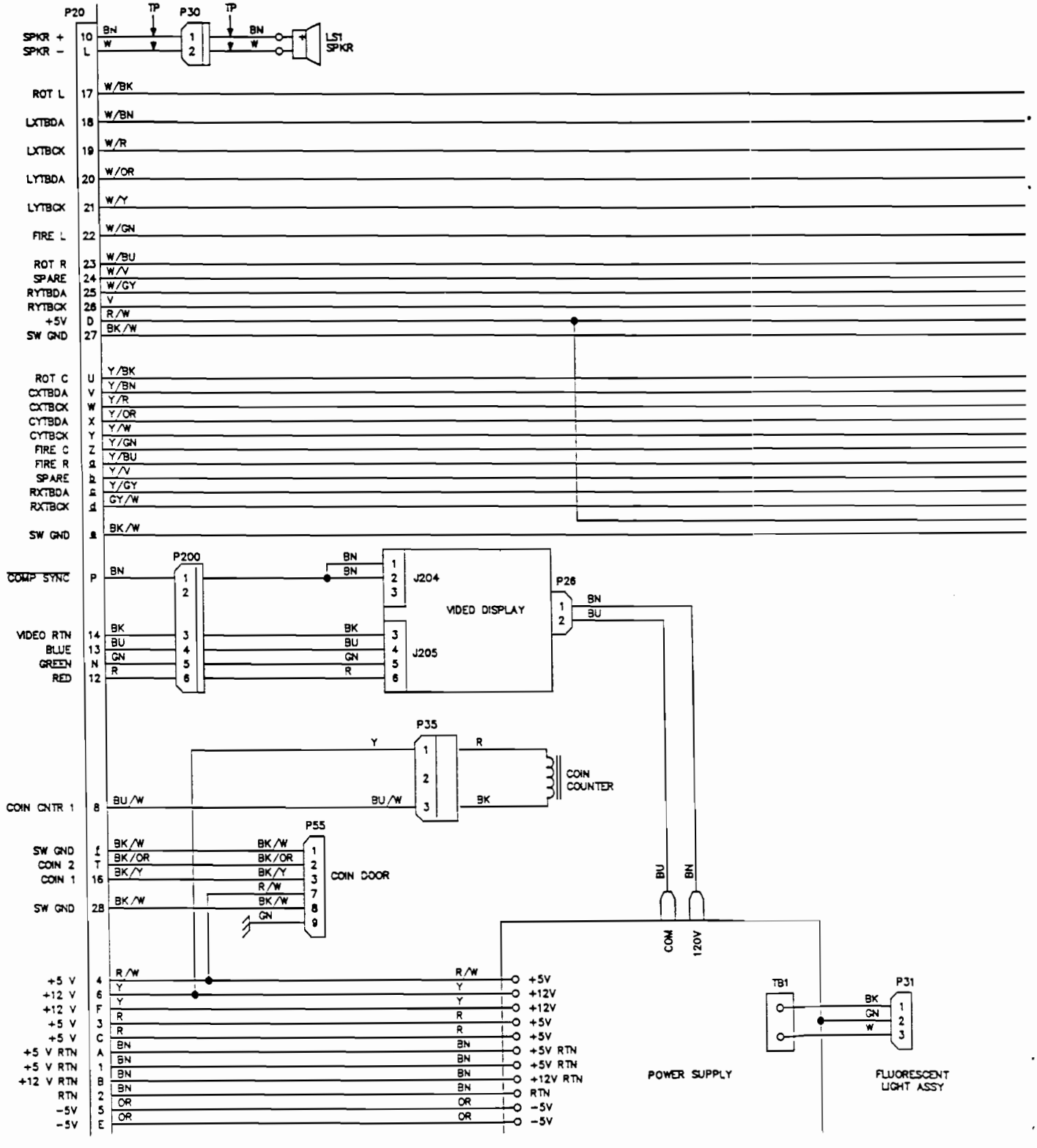
P20
TP
P30
TP
SPKR +
SPKR –
10
L
BN
W
LS1
SPKR
ROT L 17 W/BK
LXTBDA 18 W/BN
LXTBCK 19 W/R
LYTBDA 20 W/OR
LYTBCK 21 W/Y
FIRE L 22 W/GN
ROT R 23 W/BU
SPARE 24 W/V
RYTBDA 25 W/GY
RYTBCK 26 V
+5V D R/W
SW GND 27 BK/W
ROT C U Y/BK
CXTBDA V Y/BN
CXTBCK W Y/R
CYTBDA X Y/OR
CYTBCK Y Y/W
FIRE C Z Y/GN
FIRE R a Y/BU
SPARE b Y/V
RXTBDA c Y/GY
RXTBCK d GY/W
SW GND e BK/W
P200
J204
VIDEO DISPLAY
J205
P26
COMP SYNC P BN
VIDEO RTN 14 BK
BLUE 13 BU
GREEN N GN
RED 12 R
P35
Y
R
COIN
COUNTER
COIN CNTR 1 8 BU/W
BK
P55
SW GND f BK/W
COIN 2 T BK/OR
COIN 1 16 BK/Y
R/W
SW GND 28 BK/W
GN
COIN DOOR
BU
BN
COM
120V
+5 V 4 R/W
+12 V 6 Y
+12 V F Y
+5 V 3 R
+5 V C R
+5 V RTN A BN
+5 V RTN 1 BN
+12 V RTN B BN
RTN 2 BN
–5V 5 OR
–5V E OR
+5V
+12V
+12V
+5V
+5V
+5V RTN
+5V RTN
+12V RTN
RTN
–5V
–5V
TB1
P31
BK
GN
W
POWER SUPPLY
FLUORESCENT
LIGHT ASSY

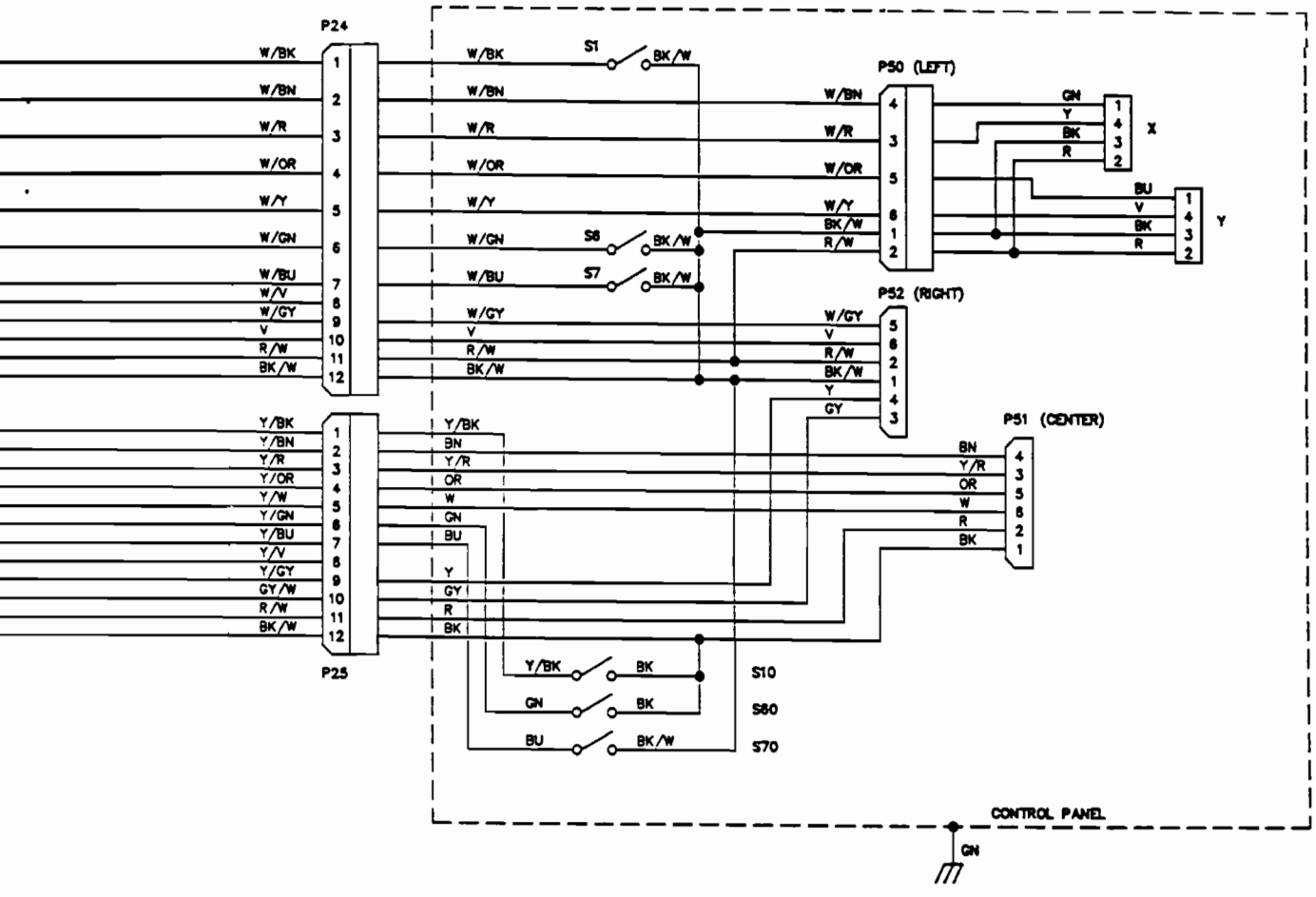

Figure 5-2 Game Wiring Diagram

048473-01 A

Bad ROM Locations by Error Address

Error Address	ROM Location High	Error Address	ROM Location Low
Program ROM 8x1024 Configuration*:			
0K-H	13H	0K-L	13H/J
20K-H	13H	20K-L	13H/J
40K-H	13J	40K-L	13K
80K-H	13K/L	80K-L	13L
C0K-H	13M	C0K-L	13N
Program ROM 2x512 and 2x4096 Configuration*:			
0K-H	13H	0K-L	13H/J
20K-H	13J	20K-L	13K
40K-H	13J	40K-L	13K
80K-H	13J	80K-L	13K
C0K-H	13J	C0K-L	13K

**If you have 8x32-pin ceramic parts in column 13 on your Rampart Game PCB, you have an 8x1024 configuration. If you have 2x28-pin ceramic parts and 2x32-pin plastic parts in column 13 of this board, you have a 2x512 and 2x4096 configuration.*

Bad RAM Locations by Error Address

Type of RAM	Address	RAM Location	Data Bits
Playfield RAM	200000-21FFFF	11H	0–3
		10H	4–7
		9H	8–11
		8H	12–15
Motion Object RAM	3E0000-3E3FFF	6N	0–7
		5N	8–15
Color RAM	3C0000-3C07FF	4H	8–15

Figure 5-3 Faulty RAM/ROM Tables

APPENDIX

Glossary

AC
Alternating current; from zero it rises to a maximum positive level, then passes through zero again to a maximum negative level.

ACTIVE STATE
The true state of a signal. For example: The active state for is low.

ADDRESS
A value that identifies a specific location of data in memory; normally expressed in hexadecimal notation.

ANALOG
Measurable in an absolute quantity (as opposed to on or off). Analog devices are volume controls, light dimmers, stereo amplifiers, etc.

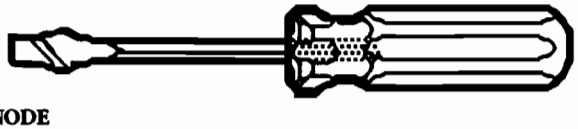

ANODE
The positive (arrow) end of a diode.

AMPLIFIER
A device used to increase the strength of an applied signal.

AMPLITUDE
The maximum instantaneous value of a waveform pulse from zero.

ASTABLE
Having no normal state. An astable device will free-run or oscillate as long as operating voltage is applied. The oscillation frequency is usually controlled by external circuitry.

AUXILIARY COIN SWITCH
A momentary-contact pushbutton switch with a black cap located on the utility panel. The auxiliary coin switch adds credits to the game without activating a coin counter.

BEZEL
A cut, formed, or machined retention device, such as the conical device used to mount a pushbutton switch to a control panel, or the formed device used to frame the video display screen.

BIDIRECTIONAL
Able to send or receive data on the same line (e.g., the data bus of a microprocessor).

BINARY
A number system that expresses all values by using two digits (0 and 1).

BIT
A binary digit; expressed as 1 or 0.

BLANKING
Turning off the beam on a cathode-ray tube during retrace.

BLOCK DIAGRAM
A drawing in which functional circuitry units are represented by blocks. Very useful during initial troubleshooting.

BUFFER
1. An isolating circuit designed to eliminate the reaction of a driven circuit on the circuits driving it (e.g., a buffer amplifier).
2. A device used to supply additional drive capability.

BUS
An electrical path over which information is transferred from any of several sources to any of several destinations.

CAPACITOR
A device capable of storing electrical energy. A capacitor blocks the flow of DC current while allowing AC current to pass.

CATHODE
The negative end of a diode.

CHIP
An integrated circuit comprising many circuits on a single wafer slice.

CLOCK
A repetitive timing signal for synchronizing system functions.

COINCIDENCE
Occurring at the same time.

COIN COUNTER
A 6-digit electromechanical device that counts the coins inserted in the coin mechanism(s).

COIN MECHANISM
A device on the inside of the coin door that inspects the coin to determine if the correct coin has been inserted.

COMPLEMENTARY
Having opposite states, such as the outputs of a flip-flop.

COMPOSITE SYNC
Horizontal and vertical synchronization pulses that are bused together into a single signal. This signal provides the timing necessary to keep the display in synchronization with the game circuitry.

COMPOSITE VIDEO
Complete video signal from the game system to drive the display circuitry, usually comprising H SYNC, V SYNC, and the video.

CREDIT
One play for one person based on the game switch settings.

CRT
Cathode-ray tube.

DATA
General term for the numbers, letters, and symbols that serve as input for device processing.

DARLINGTON
A two-transistor amplifier that provides extremely high gain.

DC
Direct current, meaning current flowing in one direction and of a fixed value.

DEFLECTION YOKE
Electromagnetic coils around the neck of a cathode-ray tube. One set of coils deflects the electron beam horizontally and the other set deflects the beam vertically.

DIAGNOSTICS
A programmed routine for checking circuitry. For example: the self-test is a diagnostic routine.

DIODE
A semiconductor device that conducts in only one direction.

DISCRETE
Non-integrated components, such as resistors, capacitors, and transistors.

DMA
Direct memory access. DMA is a process of accessing memory that bypasses the microprocessor logic. DMA is normally used for transferring data between the input/output ports and memory.

DOWN TIME
The period during which a game is malfunctioning or not operating correctly due to machine failure.

EAROM
Electrically alterable read-only memory (see ROM). The EAROM is a memory that can be changed by the application of high voltage.

FLYBACK
A step-up transformer used in a display to provide the high voltage.

GATE
1. A circuit with one output that responds only when a certain combination of pulses is present at the inputs.
2. A circuit in which one signal switches another signal on and off.
3. To control the passage of a pulse or signal.

HARNESS
A prefabricated assembly of insulated wires and terminals ready to be attached to a piece of equipment.

HEXADECIMAL
A number system using the equivalent of the decimal number 16 as a base. The symbols 0–9 and A–F are usually used.

IMPLODE
To burst inward; the inward collapse of a vacuum tube.

I/O
Input/Output.

IRQ
Interrupt request. IRQ is a control signal to the microprocessor that is generated by external logic. This signal tells the microprocessor that external logic needs attention. Depending on the program, the processor may or may not respond.

LED
The abbreviation for a light-emitting diode.

LOCKOUT COIL
Directs coins into the coin return box when there is no power to the game.

LOGIC STATE
The binary (1 or 0) value at the node of a logic element or integrated circuit during a particular time. Also called the logic level. The list below shows the voltage levels corresponding to the logic states (levels) in a TTL system.
Logic 0, Low = 0 VDC to +0.8 VDC
Grey Area (Tri-State Level) = +0.8 VDC to +2.4 VDC
Logic 1, High = +2.4 VDC to +5 VDC

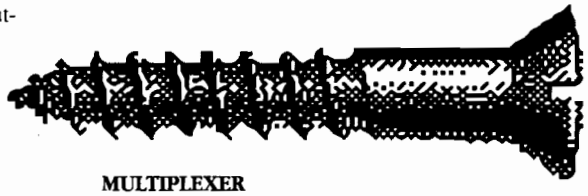

MULTIPLEXER
A device that takes several low-speed inputs and combines them into one high-speed data stream for simultaneous transmission on a single line.

NMI
Non-maskable interrupt. NMI is a request for service by the microprocessor from external logic. The microprocessor cannot ignore this interrupt request.

PAGE
A subsection of memory. A read-only memory device (see ROM) is broken into discrete blocks of data. These blocks are called pages. Each block has X number of bytes.

PCB
The abbreviation for a printed-circuit board.

PHOTOTRANSISTOR
A transistor that is activated by an external light source.

POTENTIOMETER
1. A resistor that has a continuously moving contact which is generally mounted on a moving shaft. Used chiefly as a voltage divider. Also called a pot (slang).
2. An instrument for measuring a voltage by balancing it against a known voltage.

RAM
Random-access memory. A device for the temporary storage of data.

RASTER-SCAN DISPLAY
A display system whereby images are displayed by continuously scanning the cathode-ray tube horizontally and vertically with an electron beam. The display system controls the intensity of the electron beam.

RETRACE
In a raster-scan display, retrace is the time during which the cathode-ray tube electron beam is resetting either from right to left or from bottom to top.

RESISTOR
A device designed to have a definite amount of resistance. Used in circuits to limit current flow or to provide a voltage drop.

ROM
Read-only memory. A device for the permanent storage of data.

SIGNATURE ANALYSIS
A process of isolating digital logic faults at the component level by means of special test equipment called signature analyzers. Basically, signature analyzers (e.g., the ATARI® CAT Box) convert lengthy bit streams into four-digit hexadecimal signatures. The signature read by the analyzer at each circuit node is then compared with the known good signature for that node. This process continues until a fault is located.

TROUBLESHOOT
The process of locating and repairing a fault.

VECTOR
A line segment drawn between specific X and Y coordinates on a cathode-ray tube.

WATCHDOG
A counter circuit designed to protect the microprocessor from self-destruction if a program malfunction occurs. If a malfunction does occur, the counter applies continuous pulses to the reset line of the microprocessor, which causes the microprocessor to keep resetting.

X-Y DISPLAY
A display system whereby images are displayed with vectors.

ZENER DIODE
A special diode used as a regulator. Its main characteristic is breaking down at a specified reverse-bias (Zener) voltage.

ATARI GAMES

Rampart Statistics Sheet

Date Recorded: _____ Location: _____

Meter: _____

Statistics Screen

Left Coins:	_____	
Right Coins:	_____	
Auxiliary Coins:	_____	
Idle Minutes:	_____	
1-Player Minutes:	_____	
2-Player Minutes:	_____	
3-Player Minutes:	_____	
New Game Minutes:	_____	
Continued Game Minutes:	_____	
Left Player Minutes:	_____	
Center Player Minutes:	_____	
Right Player Minutes:	_____	
Active Minutes:	_____	
Total Games:	_____	
Total Sessions:	_____	
1-Player Beginners:	_____	
1-Player Advanced:	_____	
Error Count:	_____	
Total Coins:	_____	
Average Time/Coin:	_____	sec.
Percentage Play:	_____	

Atari Games Corporation
675 Sycamore Drive
Milpitas, CA 95036-1110