REGULUS CONVERSION KIT
SCHEMATIC SHEET 1

SECTION ONE

SECTION THREE

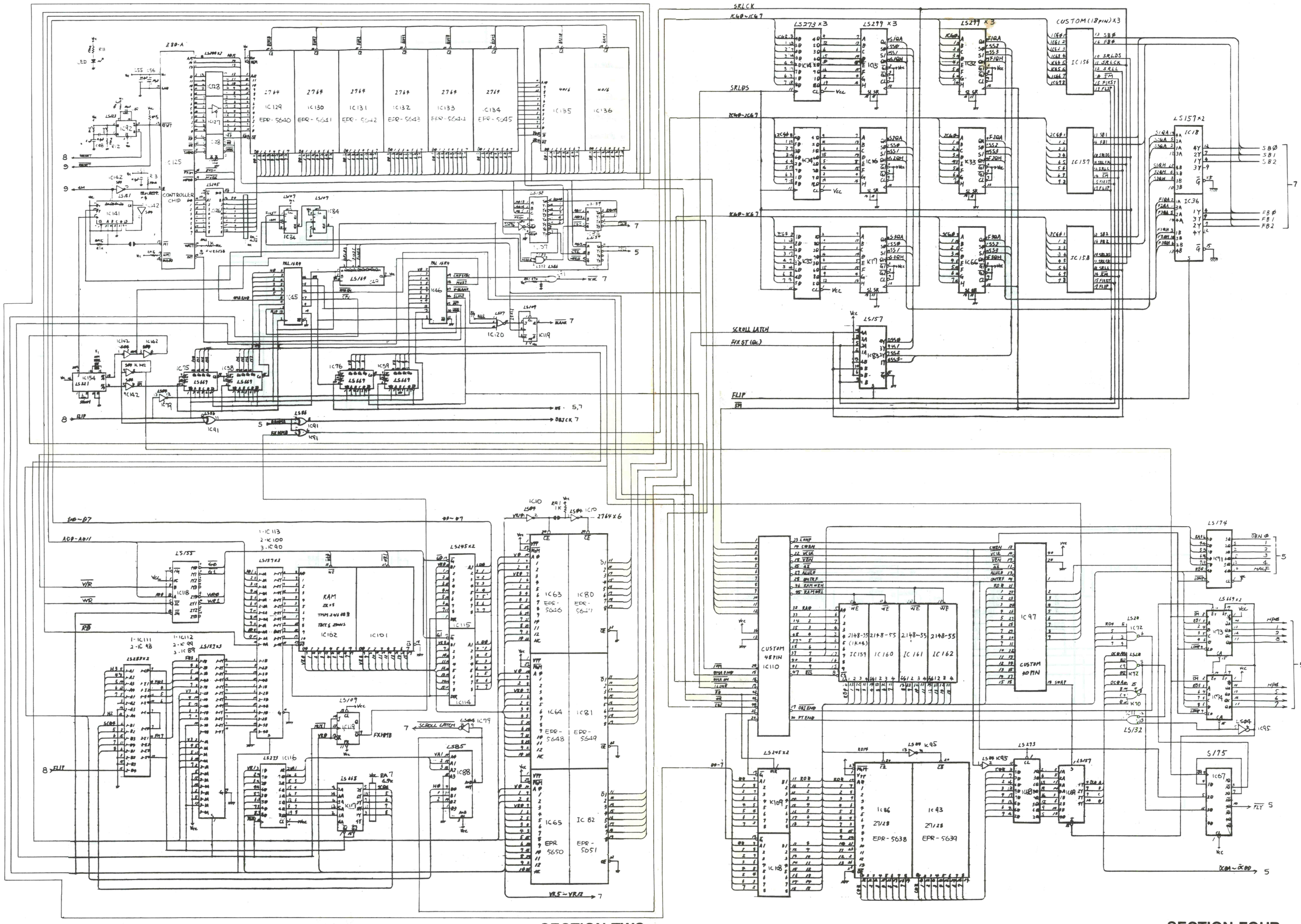

SECTION TWO

SECTION FOUR

REGULUS CONVERSION KIT
SCHEMATIC SHEET 2

SECTION FIVE

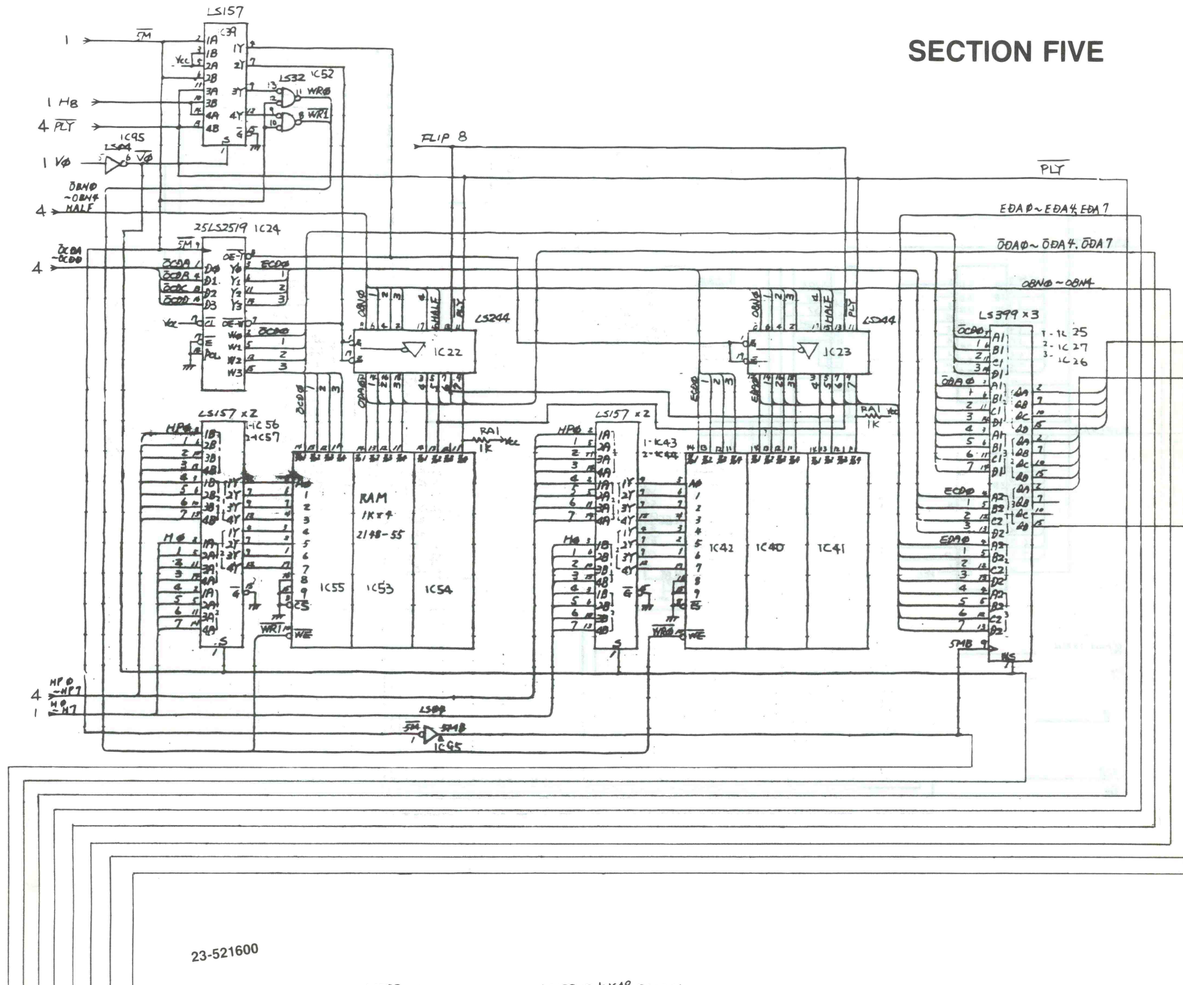

SECTION SEVEN

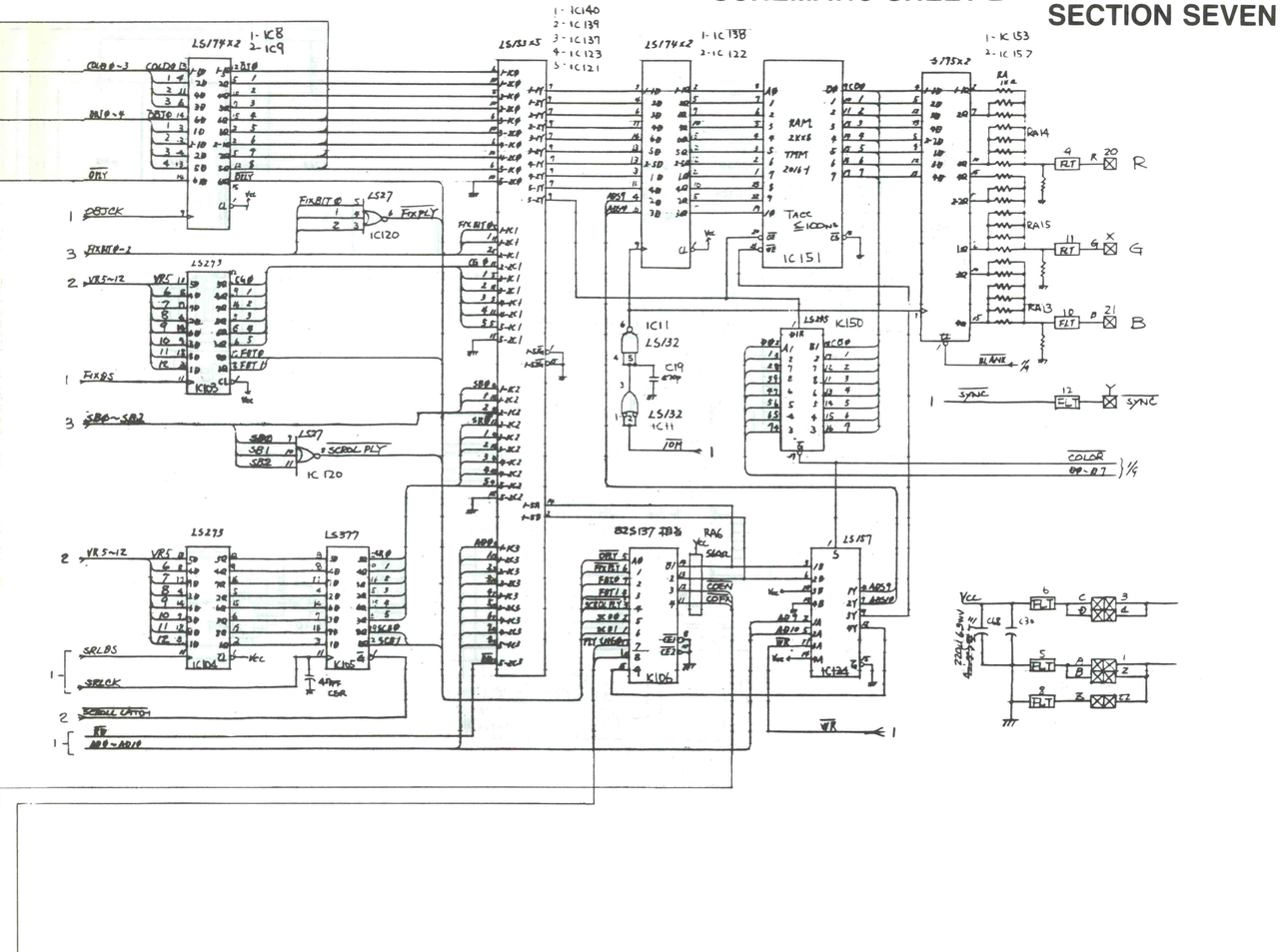

SECTION SIX

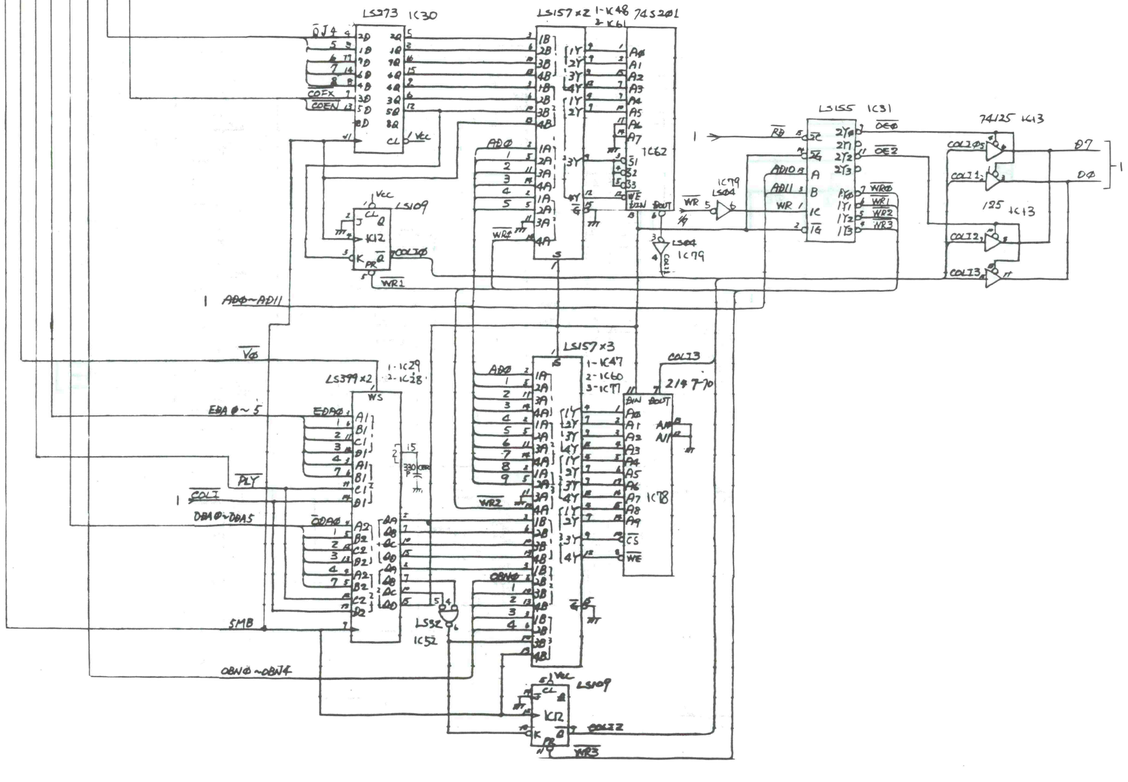
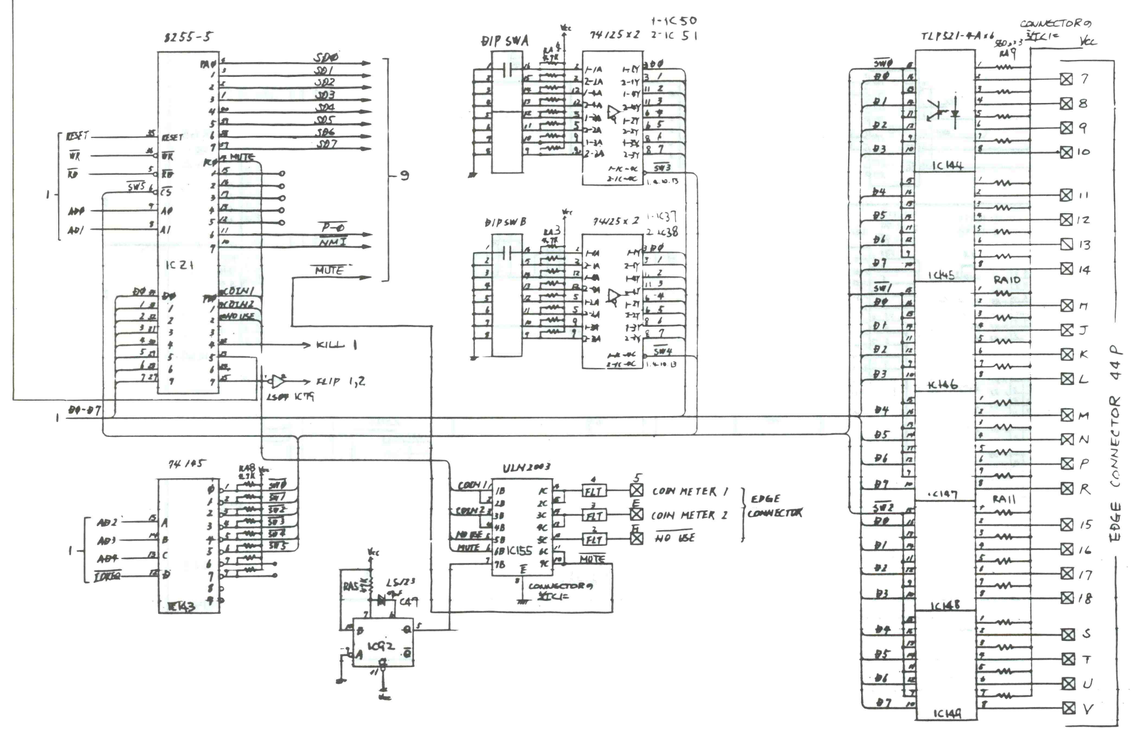
SECTION EIGHT