CO-253-03
1st printing

Supplement to

Operators Manual (TM-253), 1st printing and Schematic Package (SP-253), 1st printing

Your FIREFOX game has a linear color-raster power supply and two regulator/audio printed-circuit boards (instead of a switching power supply). This supplement contains illustrated parts lists for these assemblies. It also contains schematics that are unique to your game.

Please refer to the FIREFOX Operators Manual (TM-253) and the Schematic Package (SP-253) for more information about your game.

*FIREFOX is a trademark of Warner Bros. Inc. © 1983 Warner Bros. Inc. © 1983 Atari Inc.

Table of Contents

Illustrated Parts Lists

Figure 1	Cabinet-Mounted Assemblies	2
Figure 2	Regulator/Audio II PCB Assembly	6
Figure 3	Power Supply Assembly	12

Schematics

Figure 4	FIREFOX Main Wiring Diagram	14
Figure 5	Regulator/Audio II PCB Schematic Diagram	15
Figure 6	Linear Color Raster Power Supply Wiring Diagram	16

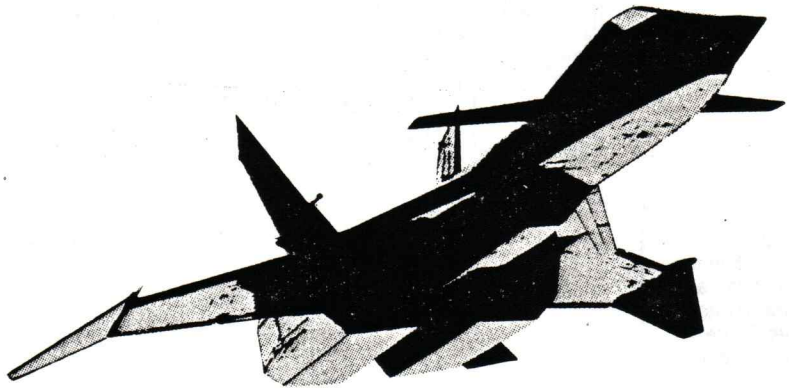

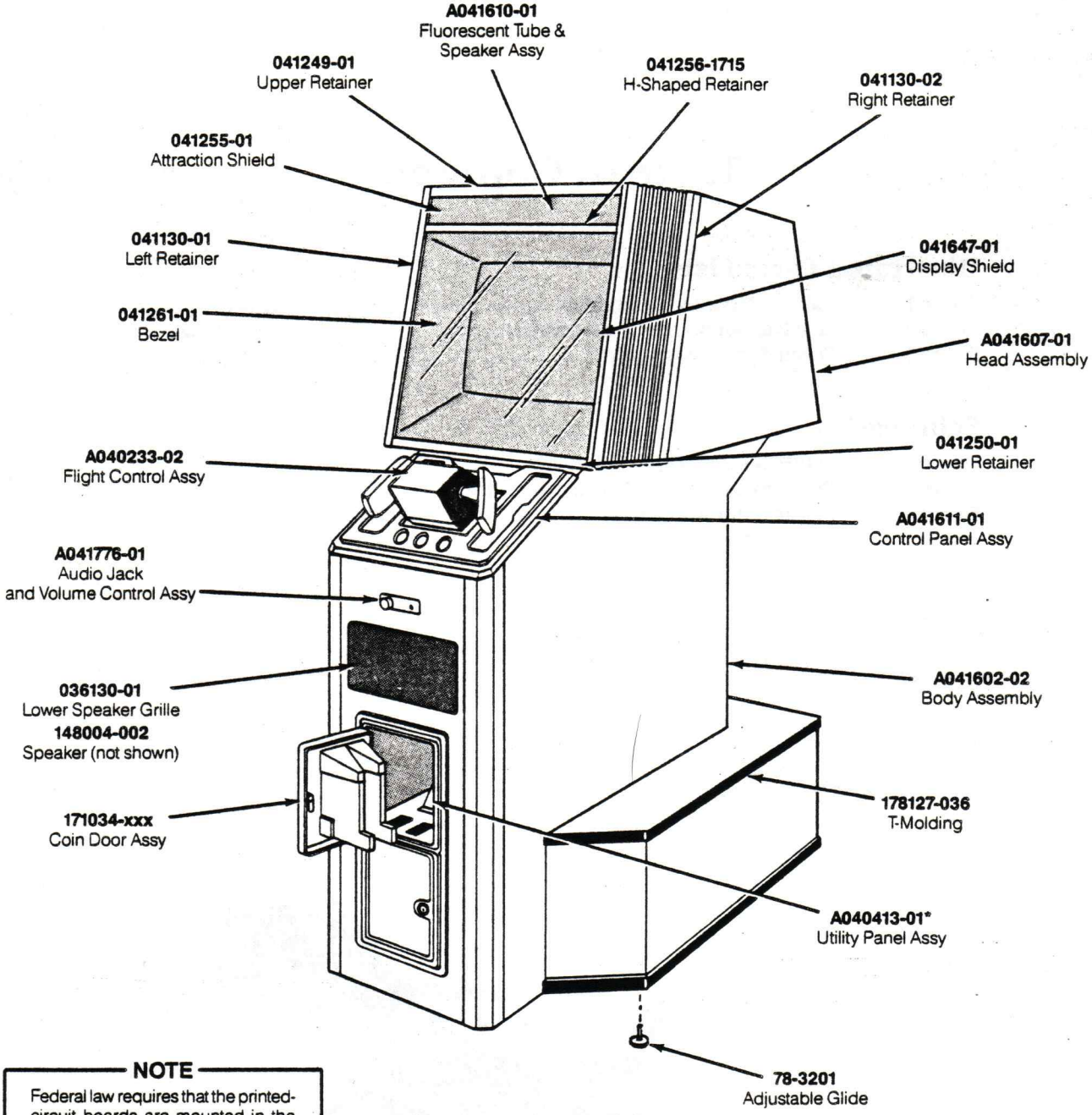

NOTE

Federal law requires that the printed-circuit boards are mounted in the Electromagnetic Interference Cage in games built in the United States. For mounting details, see Figure 6-4 in the FIREFOX Operators Manual.

*For Ireland part numbers, see parts list.

Figure 1 Cabinet-Mounted Assemblies
US-Built Cabinet A041600-02 B
Ireland-Built Cabinet A041600-04 B

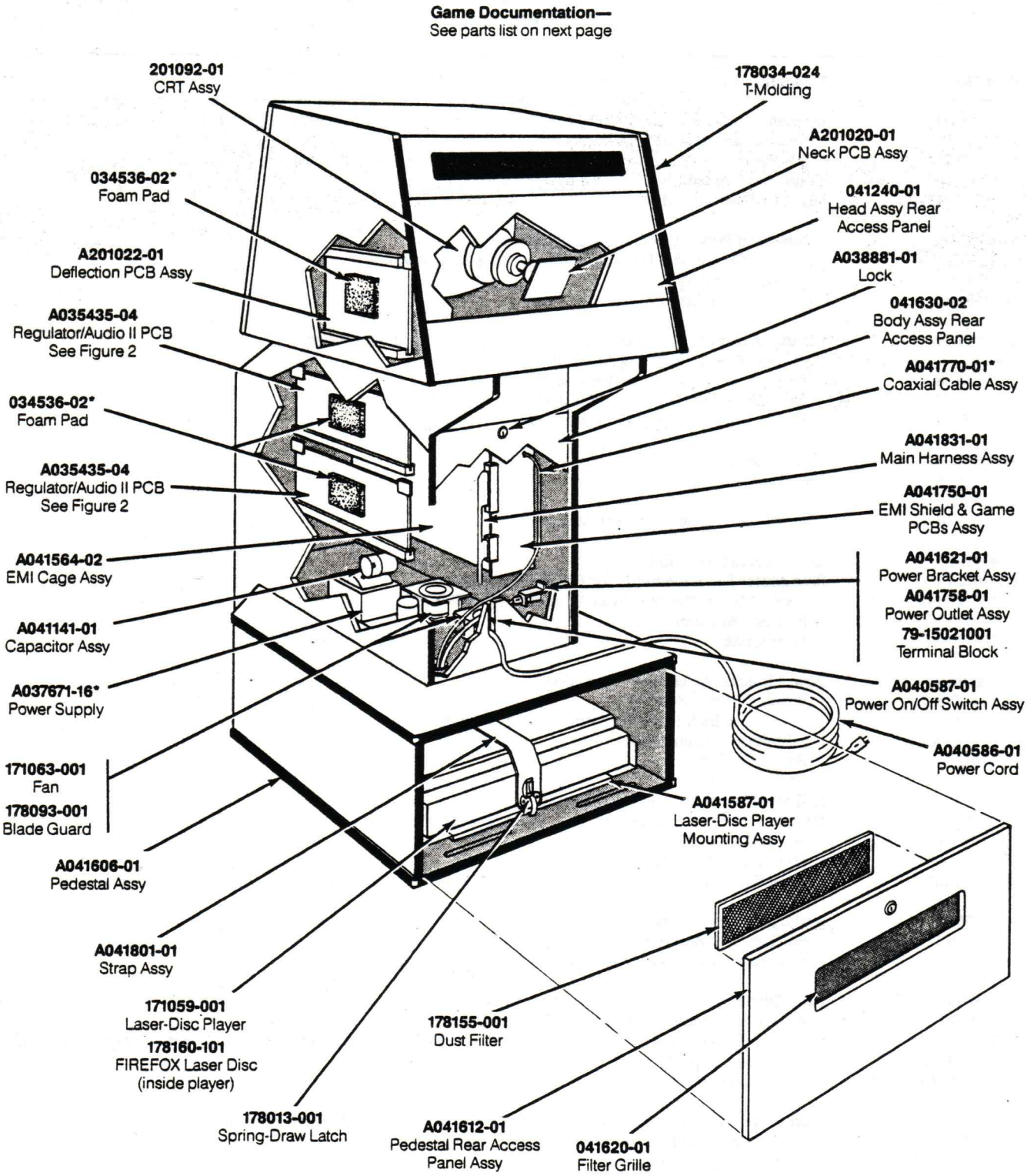

Figure 1 Cabinet-Mounted Assemblies, continued
US-Built Cabinet A041600-02 B
Ireland-Built Cabinet A041600-04 B

Cabinet-Mounted Assemblies
Parts List

Part No.	Description
A035435-04	Regulator/Audio II PCB (Two required—acceptable substitute is part no. A035435-02. Both of these versions are compatible.)
A037671-16*	Color-Raster Power Supply Assembly (Ireland part no. is A037671-18)
A040413-01*	Utility Panel Assembly (Ireland part no. is A040413-02)
A040233-02	Flight Control Assembly
A040586-01	Strain-Relief Power Cord (U.S. and Canada)
A040587-01	Power On/Off Switch, Harness, and Mounting Plate Assembly
A041141-01	Capacitor Assembly
A041584-01	EMI Cage Assembly
A041601-02	Cabinet Assembly (consists of head, body, and pedestal assemblies)
A041587-01	Laser-Disc Player Mounting Assembly—consists of
72-HA4806S	#8-32 × 0.38-Inch Cross-Recessed Screw
041586-01	Laser-Disc Player Mounting Weldment
178153-001	Shock Absorber Isolator (not shown)
A041602-02	Body Assembly
A041606-01	Pedestal Assembly
A041607-01	Head Assembly
A041610-01	Fluorescent Tube and Speaker Assembly
A041611-01	Control Panel Assembly
A041612-01	Rear Access Panel Assembly for Pedestal—consists of
A038881-01	Lock (Acceptable substitute is part no. A038881-03)
041635-02	Rear Access Panel
041620-01	Filter Grille
A041621-01	Power Bracket Assembly—consists of
A041758-01	Power Outlet Assembly
72-HA460S	#6-32 × ⅜-Inch Cross-Recessed Thread-Forming Screw
79-15021001	2-Position Terminal Block
041622-01	Power Bracket
A041750-01	EMI Shield and Game PCBs Assembly
A041767-01	50-Circuit Ribbon Cable Assembly (not shown) consists of
150023-050	50-Circuit Flat Ribbon Cable
179192-050	50-Circuit Ribbon Connector
A041770-01	Coaxial Cable Assembly (connects Video PCB to Laser-Disc Player)
A041776-01	Audio Jack and Volume Control Assembly
A041831-01	Main Harness Assembly
A041833-01	Power Harness and Component Assembly (not shown)
A041801-01	Laser-Disc Player Strap Assembly—consists of
72-1104F	#10-24 × ¼-Inch Cross-Recessed Pan-Head Screw
78-6901202	¾-Inch Wide × ⅛-Inch Thick Vinyl Foam Single- Coated Adhesive Tape (not shown—6 inches required)
041585-01	Mounting Strap
178013-001	Spring-Draw Latch
A200001-01	Atari 19-Inch Color Raster-Scan Cathode-Ray Tube (CRT) Assembly—consists of
A201020-01	Neck PCB Assembly
A201022-01	Deflection PCB Assembly
201092-01	CRT Assembly
A201024-01	Color Raster Harness Assembly (not shown)

(continued on next page)

*Indicates part numbers that are different for Ireland-built games.

Cabinet-Mounted Assemblies
Parts List, continued

Part No.	Description
78-3201	Adjustable Glide
78-6900402	¼-Inch Wide × ⅛-Inch Thick Vinyl Foam Single-Coated Adhesive Tape (not shown—36 inches required along top and bottom edge of display shield)
006008-04	Display Shield Molding (not shown)
006008-05	Attraction Panel Molding (not shown)
009992-01	On/Off Switch Cover (not shown)
034536-02	½-Inch Thick Foam Pad (in US-built cabinets, located between the Regulator/Audio II PCB and the cabinet wall; and between the Deflection PCB and the cabinet wall—in the Ireland-built cabinets, located between the Regulator/Audio II PCB and the cabinet wall; between the Deflection PCB and the cabinet wall; and between the NTSC PCB and the cabinet wall)
036130-01	Speaker Grille
037243-01*	Base Plate (located under the power supply—this part number applies to Ireland-built games only)
038091-01	Molded Coin Box (not shown)
038870-01*	Coin Box Enclosure (not shown—Ireland part no. is 038781-01)
041130-01	Left Retainer
041130-02	Right Retainer
041240-01	Rear Access Panel for Head Assembly
041249-01	Upper Attraction Panel Retainer
041250-01	Lower Display-Shield Retainer
041255-01	Attraction Panel
041256-1715	Lower Attraction Panel Retainer (H-Shaped Retainer)
041261-01	Video Display Bezel
041618-01	Semi-Rigid Attraction Film with Graphics (not shown)
041630-02	Rear Access Panel for Body Assembly (includes lock)
041647-01	Display Shield
148004-002	5-Inch, 4-Ohm, 5-Watt, 6-Ounce Shielded High-Fidelity Speaker (two located above the coin door—not shown)
171034-xxx	Coin Door Assembly
171059-001	Laser-Disc Player
171063-001	110 V, 60 Hz Exhaust Fan
178013-001	Spring-Draw Latch (not shown)
178034-024	¾-Inch Black Plastic T-Molding (21 inches required on front of pedestal base; 168 inches required on the side panels of the head assembly; 104 inches required on the side panels of the body assembly; 94 inches required on the front panel of the body assembly)
178093-001	Guard for Fan Blade
178127-036	2¼-Inch Black Plastic T-Molding (68 inches required on the pedestal)
178155-001	¼-Inch Thick, 5-Ply Air Filter (located on rear access panel of pedestal)
178160-101	FIREFOX Laser Disc (not shown)
179125-001	Grounding Clip on Main Harness (not shown)
201018-01	19-Inch CRT Bracket (not shown)
	The following six items are technical information supplements to this game:
CO-253-02	FIREFOX Self-Test Supplement
CO-253-03	FIREFOX Supplement (for games built with raster power supplies and regulator/audio printed-circuit boards)
SP-253	FIREFOX Schematic Package
ST-253	FIREFOX Self-Test Chart and Option Switch Settings
TM-253	FIREFOX Operators Manual
TM-254	Atari 19-Inch and 25-Inch Color Raster Display Manual

*Indicates part numbers that are different for Ireland-built games.

NOTICE TO ALL PERSONS RECEIVING THIS DRAWING CONFIDENTIAL: Reproduction forbidden without the specific written permission of Atari, Inc., Sunnyvale, CA. This drawing is only conditionally issued, and neither receipt nor possession thereof confers or transfers any right in, or license to use, the subject matter of the drawing or any design or technical information shown thereon, nor any right to reproduce this drawing or any part thereof. Except for manufacture by vendors of Atari, Inc., and for manufacture under the corporation's written license, no right is granted to reproduce this drawing or the subject matter thereof, unless by written agreement with or written permission from the corporation.

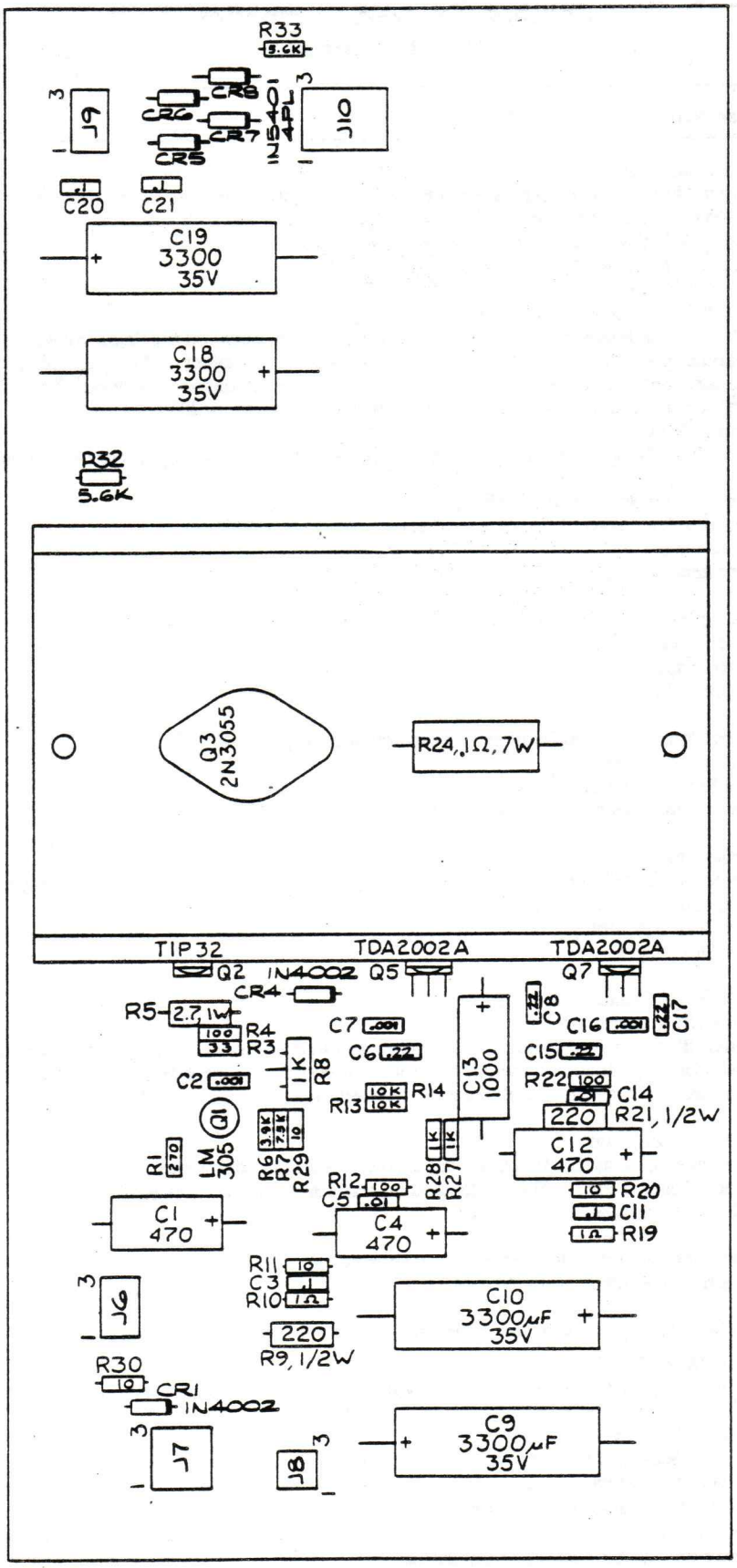

Figure 2 Regulator/Audio II PCB Assembly A035435-04 H

Regulator/Audio II PCB Assembly
Parts List

NOTE

The A035435-04 version of the Regulator/Audio II PCB Assembly is the standard version. The alternate version is A035435-02. Both versions are compatible and interchangeable.

Designator	Description	Part No.
	Capacitors	
C1	470 µF, 25 V, Aluminum Electrolytic Fixed Axial-Lead Capacitor	24-250477
C2	0.001 µF, 50 V, Ceramic-Disc Axial-Lead Capacitor	122002-102
C3	0.1 µF, +80%, -20%, 50 V, Ceramic-Disc Capacitor	122002-104
C4	470 µF, 25 V, Aluminum Electrolytic Fixed Axial-Lead Capacitor	24-250477
C5	0.01 µF, 25 V Minimum, Ceramic-Disc Axial-Lead Capacitor (Acceptable substitute is part no. 122005-103)	100015-103
C6	0.22 µF, 25 V, Ceramic-Disc Axial-Lead Capacitor	122004-224
C7	0.001 µF, 50 V, Ceramic-Disc Axial-Lead Capacitor	122002-102
C8	0.22 µF, 25 V, Ceramic-Disc Axial-Lead Capacitor	122004-224
C9, C10	3300 µF, 35 V, Aluminum Electrolytic Fixed Axial-Lead Capacitor	24-350338
C11	0.1 µF, +80%, -20%, 50 V, Ceramic-Disc Capacitor	122002-104
C12	470 µF, 25 V, Aluminum Electrolytic Fixed Axial-Lead Capacitor	24-250477
C13	1000 µF, 25 V, Aluminum Electrolytic Fixed Axial-Lead Capacitor	24-250108
C14	0.01 µF, 25 V Minimum, Ceramic-Disc Axial-Lead Capacitor (Acceptable substitute is part no. 122005-103)	100015-103
C15	0.22 µF, 25 V, Ceramic-Disc Axial-Lead Capacitor	122004-224
C16	0.001 µF, 50 V, Ceramic-Disc Axial-Lead Capacitor	122002-102
C17	0.22 µF, 25 V, Ceramic-Disc Axial-Lead Capacitor	122004-224
C18, C19	3300 µF, 35 V, Aluminum Electrolytic Fixed Axial-Lead Capacitor	24-350338
C20, C21	0.1 µF, +80%, -20%, 50 V, Ceramic-Disc Capacitor	122002-104
	Diodes	
CR1	Type-1N4002, 1 A, 100 V Silicon Rectifier Diode	31-1N4002
CR4	Type-1N4002, 1 A, 100 V Silicon Rectifier Diode	31-1N4002
CR5–CR8	Type-1N5401, 3 A, 100 V Silicon Rectifier Diode	31-1N5401
	Integrated Circuits	
Q1	Type-LM305, 5 V, Linear Voltage Regulator	37-LM305
Q5	Type-TDA2002A, 8 W, Linear Audio Amplifier Integrated Circuit	137151-002
Q7	Type-TDA2002A, 8 W, Linear Audio Amplifier Integrated Circuit	137151-002
	Resistors	
R1	270 Ω, ±5%, ¼ W Resistor	110000-271
R3	33 Ω, ±5%, ¼ W Resistor	110000-330
R4	100 Ω, ±5%, ¼ W Resistor	110000-101
R5	2.7 Ω, ±5%, 1 W Resistor	110009-027
R6	3.9 kΩ, ±5%, ¼ W Resistor	110000-392
R7	7.5 kΩ, ±5%, ¼ W Resistor	110000-752
R8	1 kΩ Vertical PCB-Mounting Cermet Potentiometer	119002-102
R9	220 Ω, ±5%, ½ W Resistor	110001-221

(continued on next page)

Regulator/Audio II PCB Assembly
Parts List, continued

Designator	Description	Part No.
R10	1 Ω, ±5%, ¼ W Resistor	110000-010
R11	10 Ω, ±5%, ¼ W Resistor	110000-100
R12	100 Ω, ±5%, ¼ W Resistor	110000-101
R13, R14	10 kΩ, ±5%, ¼ W Resistor	110000-103
R19	1 Ω, ±5%, ¼ W Resistor	110000-010
R20	10 Ω, ±5%, ¼ W Resistor	110000-100
R21	220 Ω, ±5%, ½ W Resistor	110001-221
R22	100 Ω, ±5%, ¼ W Resistor	110000-101
R24	0.1 Ω, ±3%, 7 W Wirewound Resistor	19-100P1015
R27, R28	1 kΩ, ±5%, ¼ W Resistor	110000-102
R29, R30	10 Ω, ±5%, ¼ W Resistor	110000-100
R32, R33	5.6 kΩ, ±5%, ¼ W Resistor	110000-562
	Transistors	
Q2	Type-TIP32 PNP Power Transistor	33-TIP32
Q3	Type-2N3055 NPN Silicon Transistor	34-2N3055
	Mechanical Parts	
J6	6-Position Connector Receptacle	79-58306
J7	9-Position Connector Receptacle	79-58308
J8	4-Position Connector Receptacle	79-58354
J9	6-Position Connector Receptacle	79-58306
J10	12-Position Connector Receptacle	79-58346
Q2	#6-32 × ¼-Inch Binder-Head Nylon Screw	75-F60405
Q3	#6-32 Nut/Washer Assembly	75-99516
Q3	Thermally Conductive Silicon Insulator	78-16008
Q5	Thermally Conductive Silicon Insulator	78-16008
Q5, Q7	#6 × ⅜-Inch Cross-Recessed Pan-Head Zinc-Plated Steel Screw	72-6606S
	Heat Sink	034531-01
	Test Point (Acceptable substitute is part no. 179051-001)	179051-002

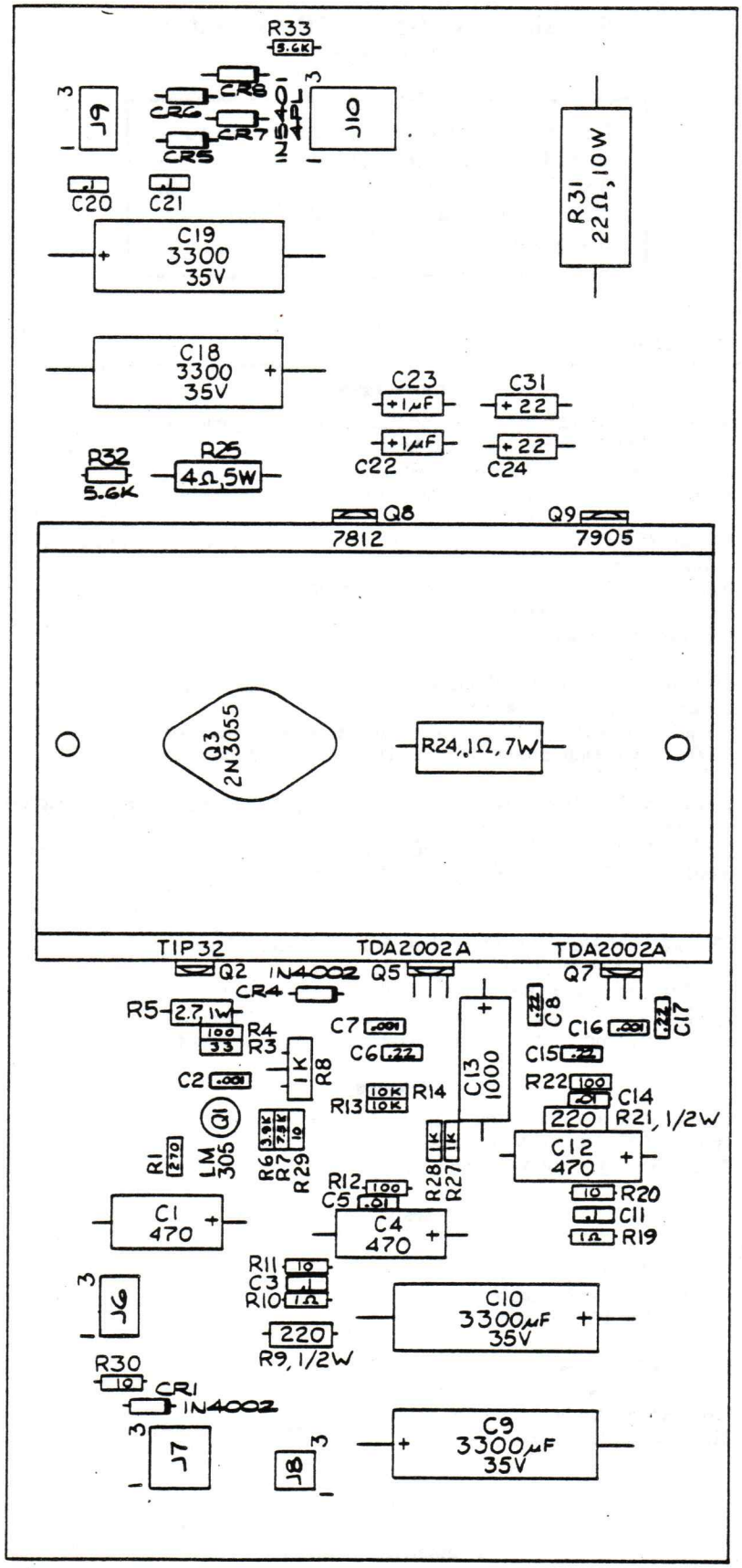

Figure 2 Regulator/Audio II PCB Assembly, continued
A035435-02 D

NOTICE TO ALL PERSONS RECEIVING THIS DRAWING CONFIDENTIAL: Reproduction forbidden without the specific written permission of Atari, Inc., Sunnyvale, CA. This drawing is only conditionally issued, and neither receipt nor possession thereof confers or transfers any right in, or license to use, the subject matter of the drawing or any design or technical information shown thereon, nor any right to reproduce this drawing or any part thereof. Except for manufacture by vendors of Atari, Inc., and for manufacture under the corporation's written license, no right is granted to reproduce this drawing or the subject matter thereof, unless by written agreement with or written permission from the corporation.

Regulator/Audio II PCB Assembly Parts List

NOTE

The A035435-04 version of the Regulator/Audio II PCB Assembly is the standard version. The alternate version is A035435-02. Both versions are compatible and interchangeable.

Designator	Description	Part No.
	Capacitors	
C1	470 µF, 25 V, Aluminum Electrolytic Fixed Axial-Lead Capacitor	24-250477
C2	0.001 µF, 35 V, Ceramic-Disc Axial-Lead Capacitor	122002-102
C3	0.1 µF, 50 V, Ceramic-Disc Axial-Lead Capacitor	122002-104
C4	470 µF, 25 V, Aluminum Electrolytic Fixed Axial-Lead Capacitor	24-250477
C5	0.01 µF, 25 V Ceramic-Disc Axial-Lead Capacitor (Acceptable substitute is part no. 122005-103)	100015-103
C6	0.22 µF, 25 V, Ceramic-Disc Axial-Lead Capacitor	122004-224
C7	0.001 µF, 35 V, Ceramic-Disc Axial-Lead Capacitor	122002-102
C8	0.22 µF, 25 V, Ceramic-Disc Axial-Lead Capacitor	122004-224
C9, C10	3300 µF, 35 V, Aluminum Electrolytic Fixed Axial-Lead Capacitor	24-350338
C11	0.1 µF, 50 V, Ceramic-Disc Axial-Lead Capacitor	122002-104
C12	470 µF, 25 V, Aluminum Electrolytic Fixed Axial-Lead Capacitor	24-250477
C13	1000 µF, 25 V, Aluminum Electrolytic Fixed Axial-Lead Capacitor	24-250108
C14	0.01 µF, 25 V Ceramic-Disc Axial-Lead Capacitor (Acceptable substitute is part no. 122005-103)	100015-103
C15	0.22 µF, 25 V, Ceramic-Disc Axial-Lead Capacitor	122004-224
C16	0.001 µF, 35 V, Ceramic-Disc Axial-Lead Capacitor	122002-102
C17	0.22 µF, 25 V, Ceramic-Disc Axial-Lead Capacitor	122004-224
C18, C19	3300 µF, 35 V, Aluminum Electrolytic Fixed Axial-Lead Capacitor	24-350338
C20, C21	0.1 µF, 50 V, Ceramic-Disc Axial-Lead Capacitor	122002-104
C22, C23	1 µF, 50 V, Aluminum Electrolytic Fixed Axial-Lead Capacitor	24-500105
C24	22 µF, 35 V, Aluminum Electrolytic Fixed Axial-Lead Capacitor	24-350226
C31	22 µF, 35 V, Aluminum Electrolytic Fixed Axial-Lead Capacitor	24-350226
	Diodes	
CR1	Type-1N4002, 1 A, 100 V Silicon Rectifier Diode	31-1N4002
CR4	Type-1N4002, 1 A, 100 V Silicon Rectifier Diode	31-1N4002
CR5–CR8	Type-1N5401, 3 A, 100 V Silicon Rectifier Diode	31-1N5401
	Resistors	
R1	270 Ω, ±5%, ¼ W Resistor	110000-271
R3	33 Ω, ±5%, ¼ W Resistor	110000-330
R4	100 Ω, ±5%, ¼ W Resistor	110000-101
R5	2.7 Ω, ±5%, 1 W Resistor	110009-027
R6	3.9 kΩ, ±5%, ¼ W Resistor	110000-392
R7	7.5 kΩ, ±5%, ¼ W Resistor	110000-752
R8	1 kΩ Vertical PCB-Mounting Cermet Potentiometer	119002-102
R9	220 Ω, ±5%, ½ W Resistor	110001-221

(continued on next page)

Regulator/Audio II PCB Assembly
Parts List, continued

Designator	Description	Part No.
R10	1 Ω, ±5%, ¼ W Resistor	110000-010
R11	10 Ω, ±5%, ¼ W Resistor	110000-100
R12	100 Ω, ±5%, ¼ W Resistor	110000-101
R13, R14	10 kΩ, ±5%, ¼ W Resistor	110000-103
R20	10 Ω, ±5%, ¼ W Resistor	110000-100
R21	220 Ω, ±5%, ½ W Resistor	110001-221
R19	1 Ω, ±5%, ¼ W Resistor	110000-010
R22	100 Ω, ±5%, ¼ W Resistor	110000-101
R24	0.1 Ω, ±3%, 7 W Wirewound Resistor	19-100P1015
R25	4 Ω, ±5%, 5 W Wirewound Resistor	116001-040
R27, R28	1 kΩ, ±5%, ¼ W Resistor	110000-102
R29, R30	10 Ω, ±5%, ¼ W Resistor	110000-100
R31	22 Ω, ±5%, 10 W Wirewound Resistor	116000-220
R32, R33	5.6 kΩ, ±5%, ¼ W Resistor	110000-562
	Transistors	
Q2	Type-TIP32 PNP Power Transistor	33-TIP32
Q3	Type-2N3055 NPN Silicon Transistor	34-2N3055
	Miscellaneous	
J6	6-Position Connector Receptacle	79-58306
J7	9-Position Connector Receptacle	79-58308
J8	4-Position Connector Receptacle	79-58354
J9	6-Position Connector Receptacle	79-58306
J10	12-Position Connector Receptacle	79-58346
Q1	5 V Linear Voltage Regulator	37-LM305
Q2, Q9	Thermally Conductive Silicon Insulator	78-16014
Q3	Thermally Conductive Silicon Insulator	78-16008
Q5	Audio Amp TDA2002A	137151-002
Q7	Audio Amp TDA2002A	137151-002
Q8	Type-7812 +12 V Voltage Regulator	37-7812
Q9	Type-7905 −5 V Voltage Regulator	37-7905
	Heat Sink	034531-01
	Test Point (Acceptable substitute is part no. 179051-001)	179051-002

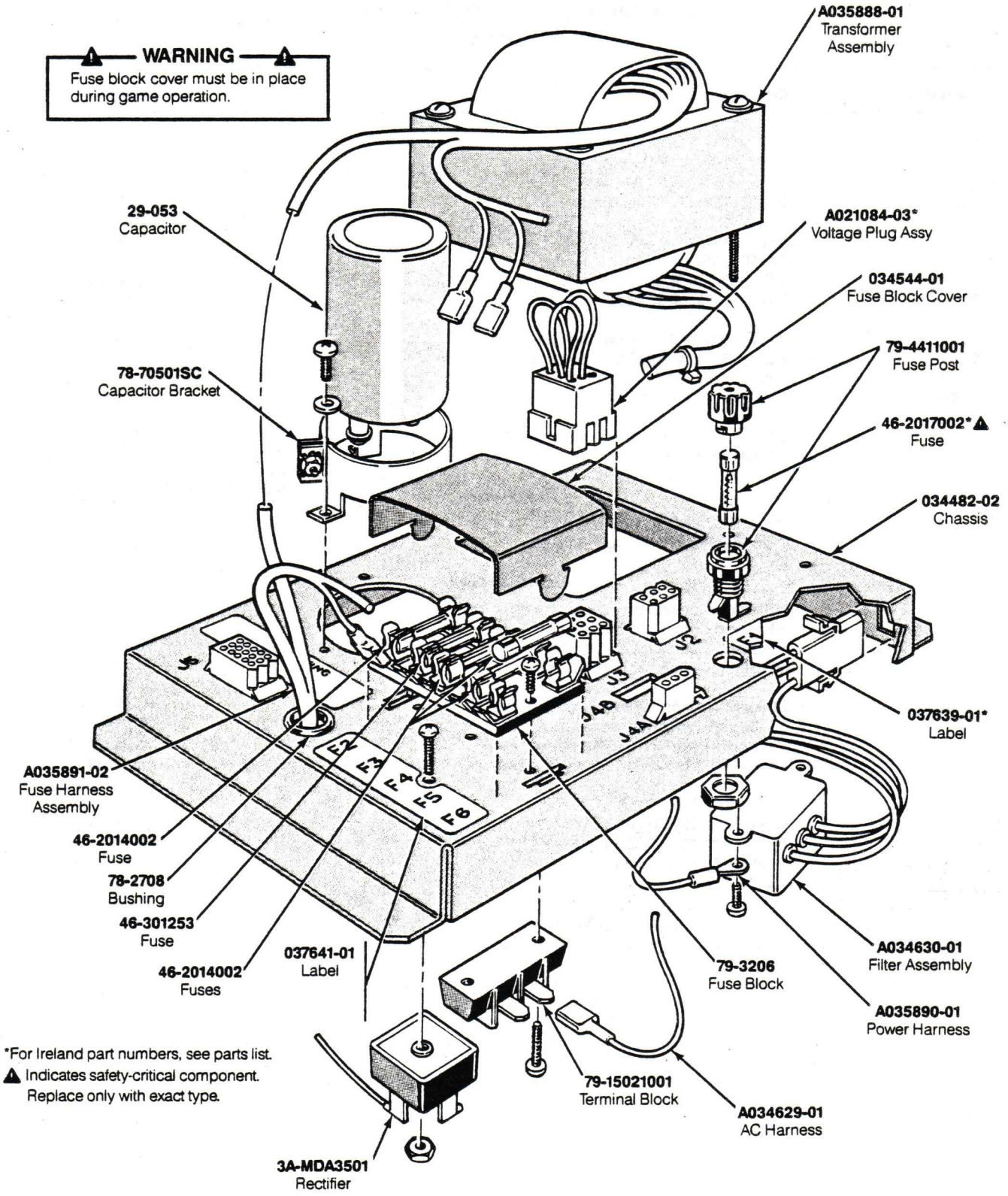

Figure 3 Power Supply Assembly
US-Built Cabinet A037671-16 L
Ireland-Built Cabinet A037671-18 L

Power Supply Assembly
Parts List

Designator	Description	Part No.
C1	27,000 μF, 15 VDC Electrolytic Capacitor	29-053
C1	2-Inch Diameter Capacitor Mounting Bracket	78-70501SC
CR1	Type-MDA 3501 Bridge Rectifier	3A-MDA3501
F1	Panel-Mounting Non-Indicating 3AG Cartridge-Type Fuse Post	79-4411001
F1	▲ 7A, 250 V Slow-Blow Fuse (Ireland part no. is 46-2014002, a 4A, 250 V Slow-Blow Fuse—acceptable part no. for Ireland-built supply is 46-2014001)	46-2017002*
F1	Label for Fuse Value (Ireland part no. is 037639-02)	037639-01*
F2, F4–F6	4 A, 250 V Slow-Blow Glass Cartridge-Type Fuse (Acceptable substitute is part no. 46-2014001)	46-2014002
F2–F6	Label for Fuse Values	037641-01
F2–F6	5-Position 3AG Fuse Block with ¼-Inch Quick-Disconnect Terminals	79-3206
F2–F6	Fuse Block Cover	034544-01
F3	25 A, 32 V, 3AG Slow-Blow Glass Cartridge-Type Fuse	46-301253
F4	2-Circuit Single-Row Terminal Block	79-15021001
FL1	RFI Filter Assembly (designation not marked)	A034630-01
J2	Power Harness	A035890-01
J3	Voltage Plug Assembly for 220 V.(200–240 VAC—grey wire color) (Ireland part no. is A037479-02, which includes the voltage plug for 200–240 VAC with the blue wire color, and the voltage plug for 220–260 VAC with the brown wire color)	A021084-03*
J4A	AC Harness	A034629-01
T1	Transformer Assembly (Acceptable substitute is part no. A035888-02)	A035888-01
	Power Supply Chassis Base	034482-02
	Fuse Harness	A035891-02
	Nylon Type 6/6 Hole Bushing with ⅝-Inch Inside Diameter × 55/64-Inch Outside Diameter × ¼-Inch Thick	78-2708

*Indicates part numbers that are different for Ireland-built games.

▲ Indicates safety-critical component. Replace only with exact type.

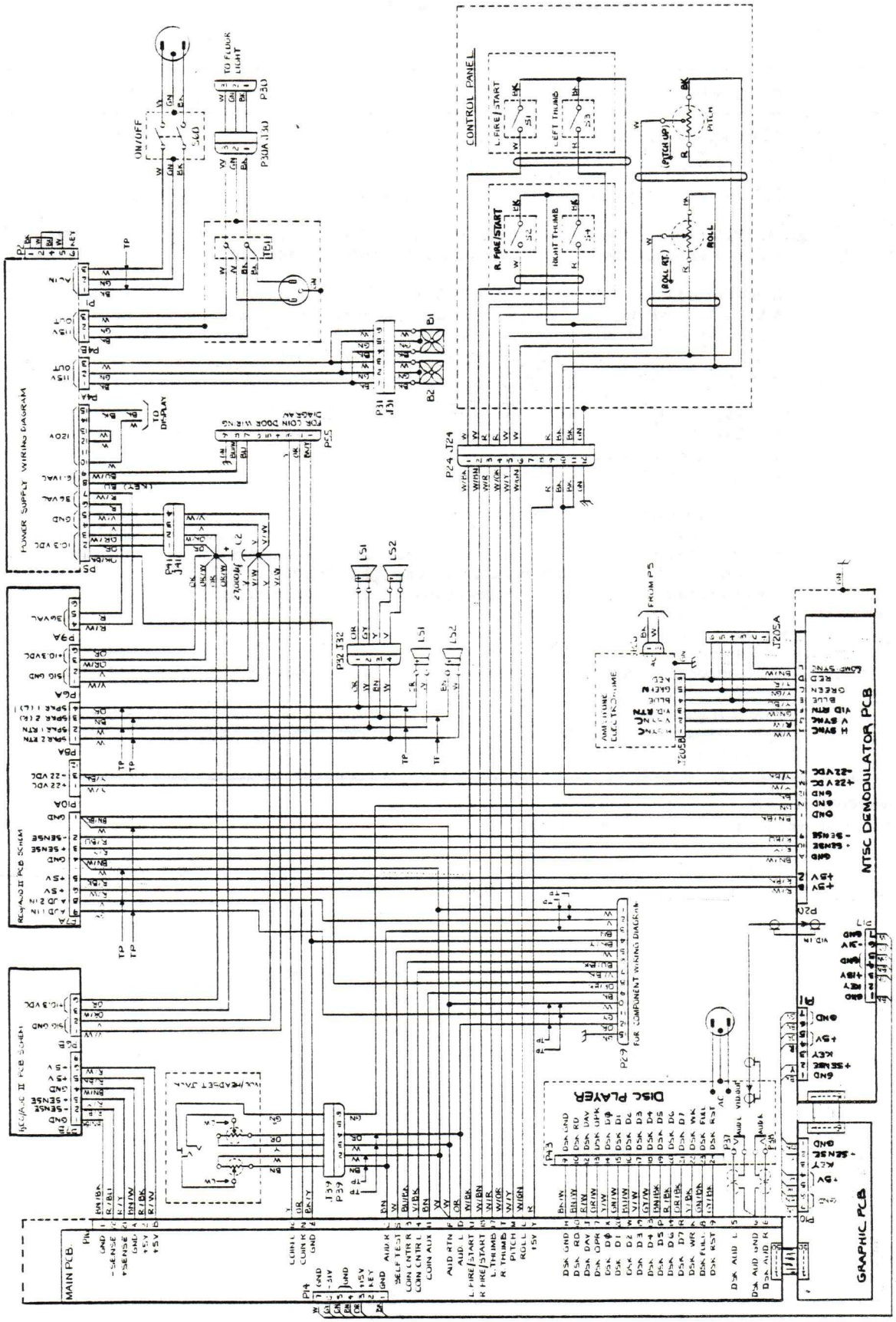

Figure 4 FIREFOX Main Wiring Diagram

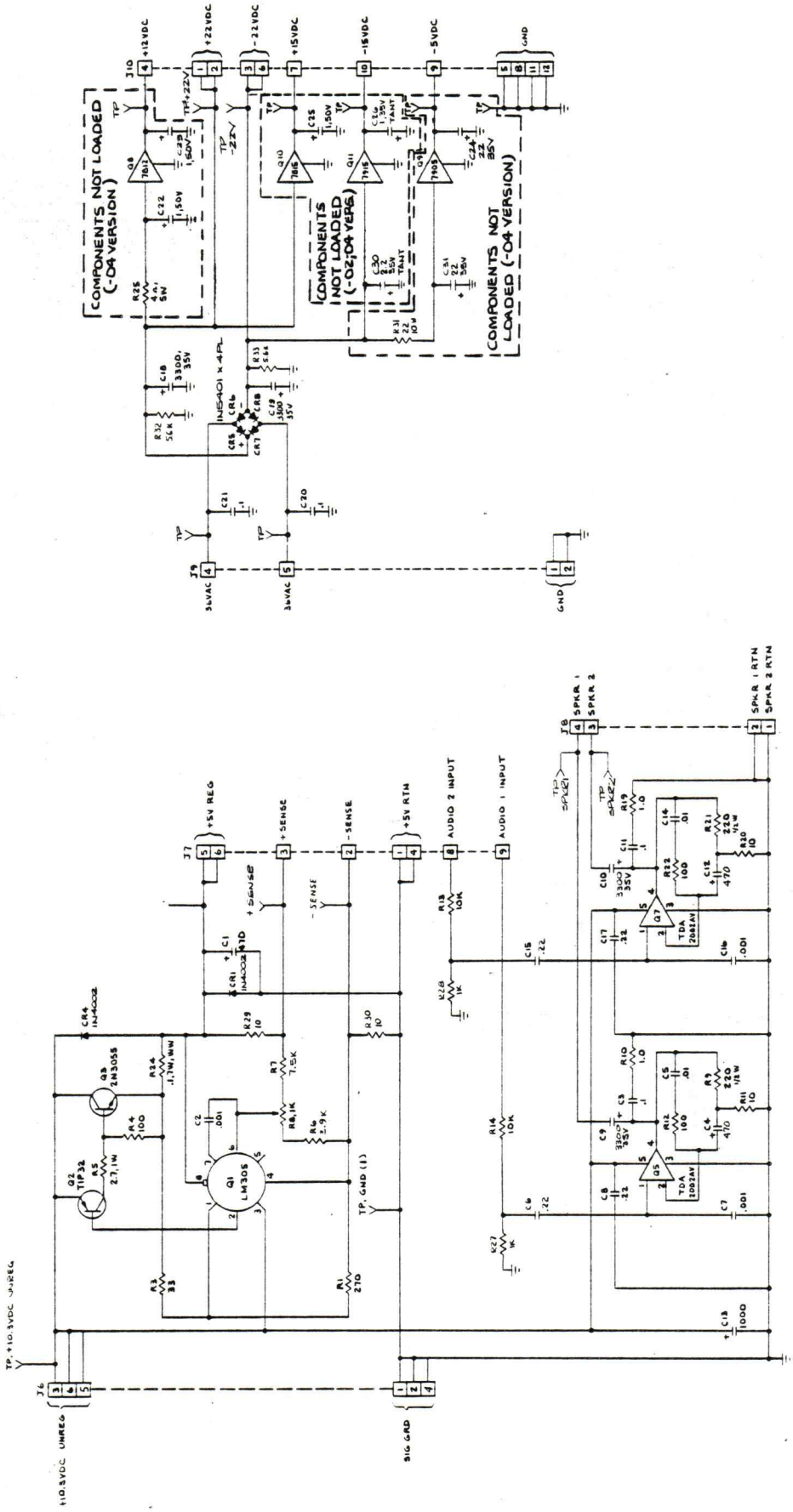

Figure 5 Regulator/Audio II PCB Schematic Diagram

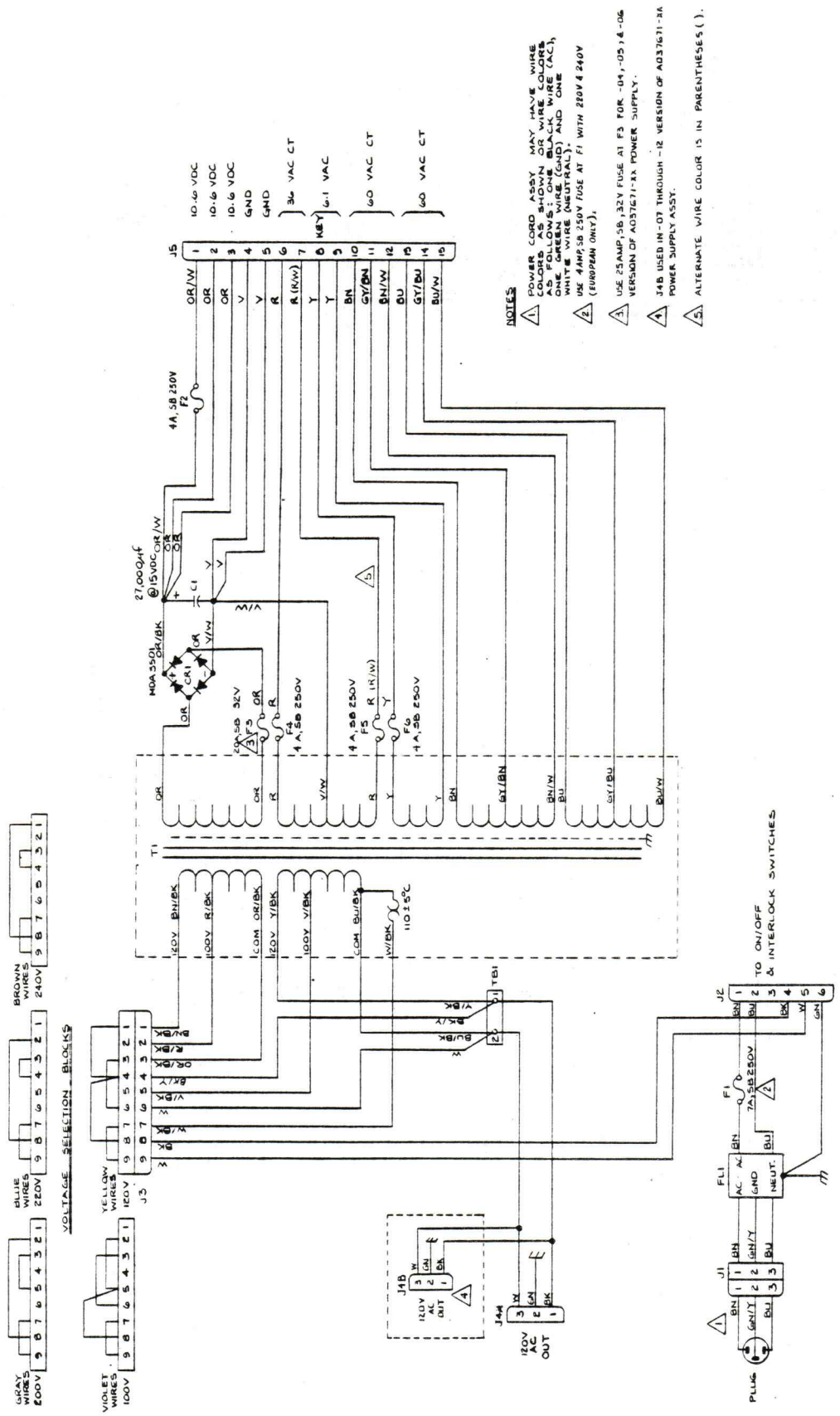

Figure 6 Linear Color Raster Power Supply Wiring Diagram