Williams®

16P-504-101
Game No. 504
June, 1981

PHARAOH

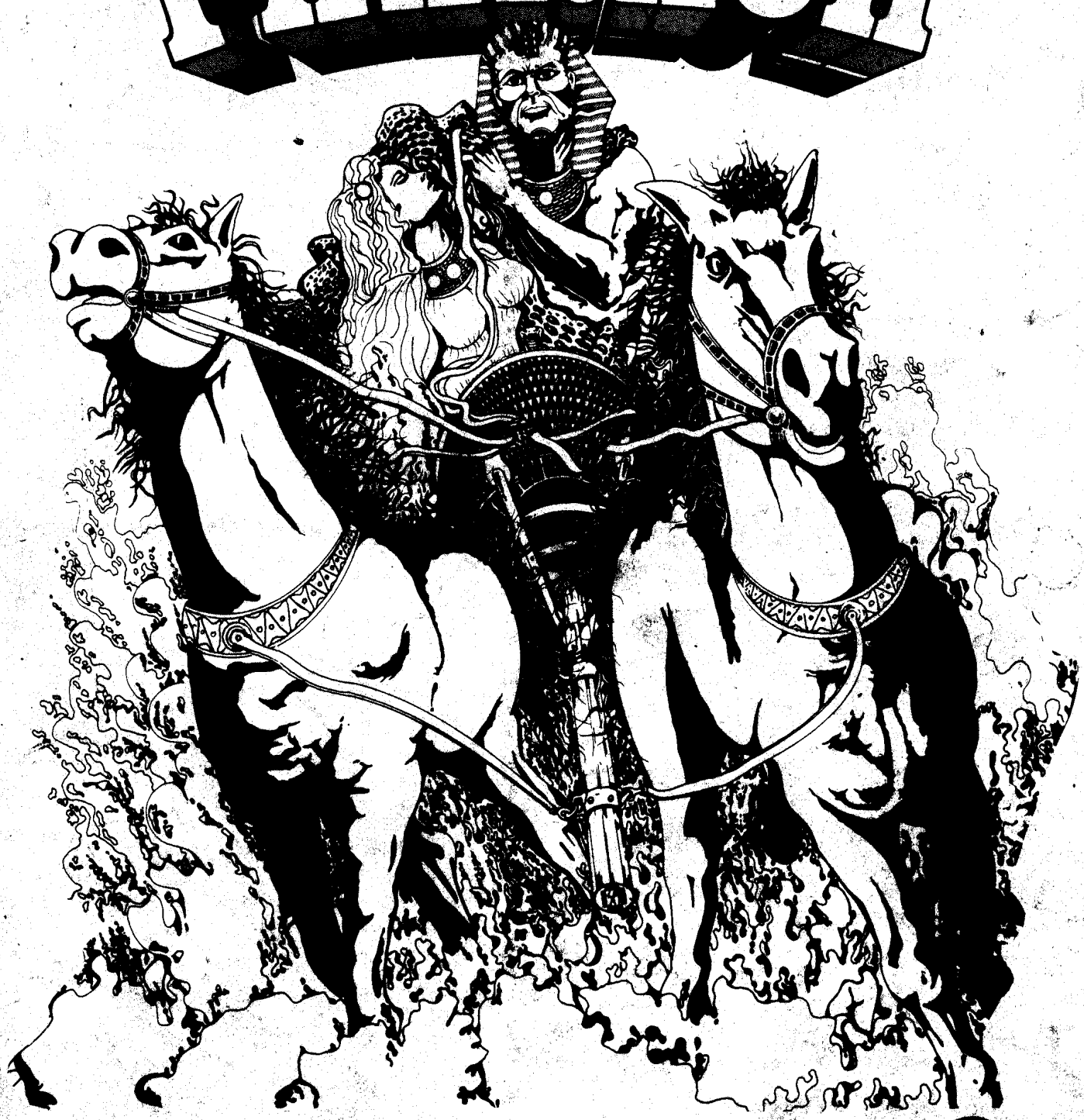

Williams®
ELECTRONICS, INC.
3401 N. California Ave., Chicago, IL 60618
Cable Address: WILCOIN, CHICAGO
(312) 267-2240

For service call TOLL-FREE:
800-621-4765
In Illinois call
800-972-7898

This document has been downloaded from:
FLIPPERSPILL.COM

FOREWORD

This instruction and drawing set provides essential installation information unique to PHARAOH. For game operation, bookkeeping, game adjustment, diagnostic and self-test and basic troubleshooting procedures, refer to the instruction booklet located in the envelope inside the coin door. For detailed troubleshooting and interconnection information, refer to Williams Solid State Flipper Maintenance Manual and Supplements.

SPECIAL CONSIDERATIONS WHEN REPLACING CIRCUIT BOARDS

CPU Board
1. Revision level 7 CPU Boards (batteries located on lower left corner at board) of later boards must be used.
2. Must be equipped with blue-labeled Flipper ROMs and blue-labeled Game ROMs.
3. Jumpers W3, W10, W11, W14, W17, W19, W20, and W22 must be connected. Jumpers W4, W9, W12, W15, W16, W18, W21, and W23 must be removed. With the exception of W25, (Factory Setting Jumper) all other jumpers are not changed.

Driver Board
Must be equipped with zero-ohm resistors or wire jumpers (W9-W16) in place of switch matrix drive series resistors R204-R211.

Sound Board
1. Model D 8224 required for speech.
2. Must be jumpered for ROM operation and be equipped with Sound ROM 6. (Jumpers W3, W5, W7, W9, W10, W12, and W15 connected; W2, W4, W6, W8, W11, and W13 removed).

Power Supply Board
1. Model D 8345 board required (equipped with relay).
2. Fuse F4 (20A SB) for flipper solenoids and magnets must be installed.

Display Boards
Model C 8363 Master Display and 7-digit Slave Displays required.

Optional Speech Module
Requires 5T5041 (IC7), 5T5042 (IC5), 5T5043 (IC6), and 5T5044 (IC4) Speech ROMs.

CONTENTS

Assembly and Interconnection 3/4
Inspection 3/4
Power Turn-On 5/6
Backbox Wiring Diagram 7
CPU Board Assembly Drawing 8
CPU Board Logic Diagram 9
Driver Board Assembly Drawing 10
Driver Board Logic Diagram (Sheet 1 of 2) 11
Driver Board Logic Diagram (Sheet 2 of 2) 13
Power Supply Assembly and
Schematic Diagrams 14
Power Wiring Diagram 15
Sound Board Assembly Drawing 16
Sound Board Logic Diagram 17
C 8228 Speech Module Assembly and Logic Diagram ... 18
Insert Board Wiring Diagram 19
C 8363 Master Display Board Assembly Drawing 20
C 8363 Master Display Board Logic Diagram 21
C 8364 and C 8365 Slave Display Boards
Assembly and Schematic Diagrams 22
Cabinet Wiring Diagram 23
Playfield Lamp Wiring Diagram 24
Playfield Solenoid Wiring Diagram 25
Playfield Switch Wiring Diagram 26

Multi-Ball **and** ***Magna-Save*** **are trademarks of Williams Electronics, Inc.**

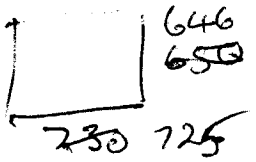

Assembly and Interconnection

With legs attached to cabinet and backbox positioned face-down on top of cabinet with the opening facing the rear of the cabinet proceed as follows:

A. Pull five cables from backbox.

B. Reach into right side of pedestal hole, pull up ground strap, and push it into backbox.

C. Remove ties securing cabinet and playfield cables to cabinet and pull up these cables.

D. Interconnect five cables. They are size and color coded.

E. Insert line cord into notch in cabinet. DO NOT PLUG IN AT THIS TIME.

F. Push remote volume control cable, White-Red solenoid ground cable, and transformer cable (terminated with four plugs) into backbox.

G. Lift up backbox and position on cabinet pedestal, engaging brackets for support.

H. Remove shipping blocks from insert door.

I. Secure backbox to cabinet using two bolts and washers.

J. Connect ground braid and White-Red wires under wing nut and washer at bottom of backbox.

K. Loosely position remote volume cable and Sound Board power cable in harness and plug connector into 10J4 and 10J1, respectively.

L. Connect bridge rectifier connector 6P1/6J1, and plug remaining two transformer connections into 3J1 and 3J9 on the Power Supply Board.

Inspection

A. Check all connectors in backbox for loose wire termination. Reseat any loose wires by pushing in on the terminal.

B. Push on all connectors attached to Master Display, CPU, Driver, and Sound Boards, and check terminations on capacitor and bridge rectifier at the lower right of the backbox.

C. Gently press on all the socketed IC packages on the CPU and Sound Boards.

D. Check that two fuses on the Sound Board, seven fuses on Power Supply Board, and two fuses on Insert Board are secure.

E. Push on the connector attached to Slave Display Boards.

F. Check that the line fuse in the bottom of the cabinet is secure.

G. Check the transformer input connector in bottom of cabinet for loose wire termination. Reseat any loose wires by pushing in on the termination.

H. Check the cabinet to coin door connector for lose wire termination. Reseat any loose wires by pushing in on the termination.

Power Turn-On and Game Setup

This machine MUST BE PLUGGED INTO A PROPERLY GROUNDED OUTLET to PREVENT SHOCK HAZARD to ensure PROPER GAME OPERATION. DO NOT use a "cheater" plug to defeat the ground pin on the line cord, DO NOT cut off the ground pin. The line voltage MUST agree with that specified on the [illegible] of the cabinet or serious damage to the machine could occur. For low-line applications (105 or 210V ac), refer to the power wiring diagram.

1. With the coin door closed, plug the game in and turn it ON. The game should come on in the game over mode as indicated by the player 1 score reading zero, game over lights lit, and the high score to date alternating with the player scores.

2. If the game comes on in the diagnostic mode (number of credits display showing 04, ball in play display showing 00, and player 1 display showing game identification) turn the game OFF and ON again.

a. If the game now comes on in the game over mode the bookkeeping and game evaluation totals have been reset to zero.

b. If the game still comes on in the diagnostic mode, open the coin door and turn the game OFF, and ON twice. This is an indication of the batteries being removed with the power OFF or coming loose during shipment. This has also resulted in features reverting to factory settings. Any changes from factory settings must be reentered using procedures provided in the instruction booklet.

3. If the game still comes on in the diagnostic mode, refer to troubleshooting procedures in the maintenance manual.

4. Lift plastic at upper right of playfield to insert captive ball, and place two balls on playfield next to outhole.

5. Perform diagnostic tests and make any desired changes to features as described in the instruction booklet.

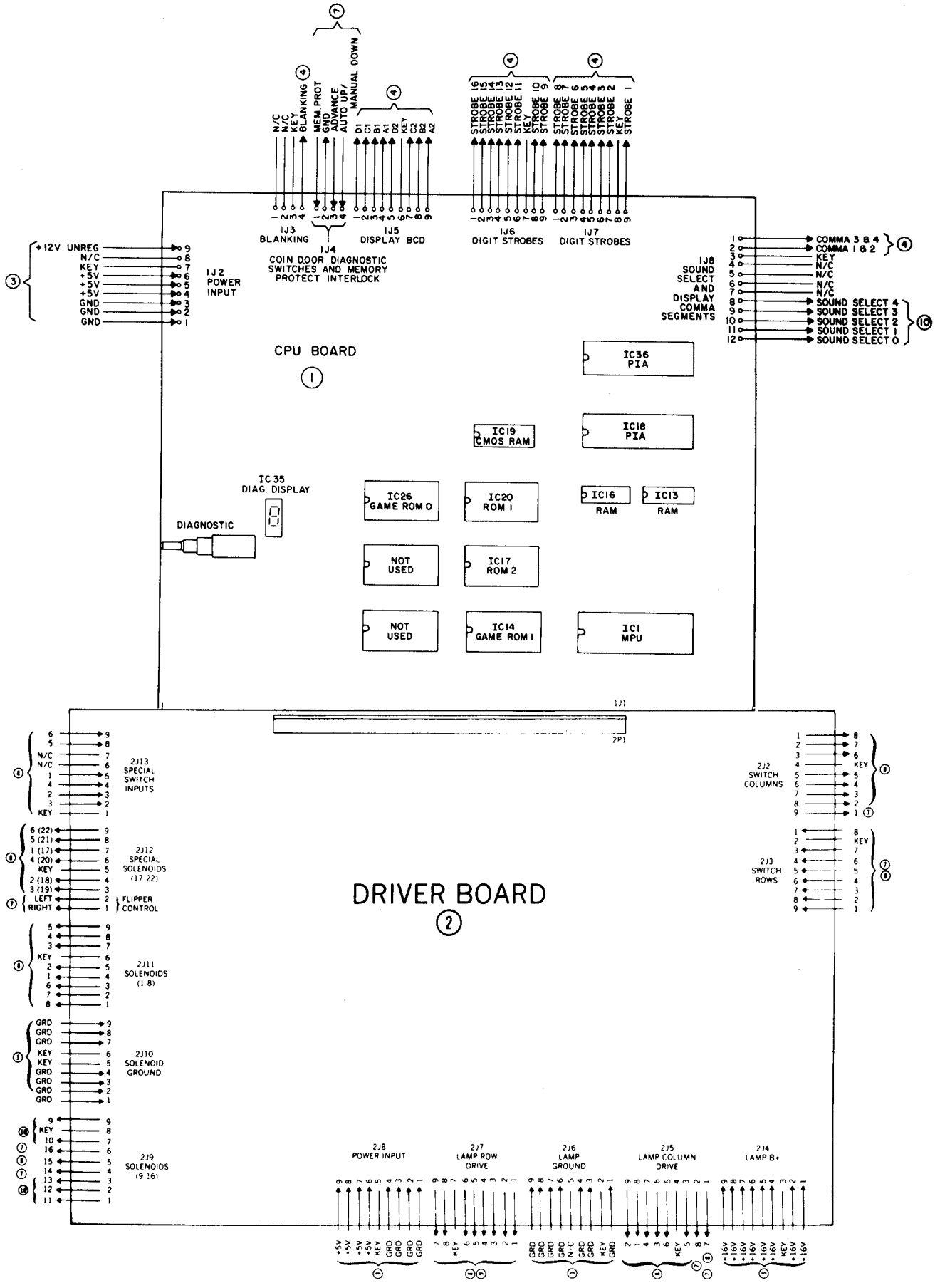
CPU BOARD
1
DRIVER BOARD
2
IC36 PIA
IC19 CMOS RAM
IC18 PIA
IC35 DIAG. DISPLAY
DIAGNOSTIC
IC26 GAME ROM 0
IC20 ROM 1
IC16 RAM
IC13 RAM
NOT USED
IC17 ROM 2
NOT USED
IC14 GAME ROM 1
IC1 MPU
1J1
2P1
1J2 POWER INPUT
+12V UNREG
N/C
KEY
+5V
+5V
+5V
GND
GND
GND
1J3 BLANKING
N/C
N/C
KEY
BLANKING
1J4 COIN DOOR DIAGNOSTIC SWITCHES AND MEMORY PROTECT INTERLOCK
MEM. PROT
GND
ADVANCE
AUTO UP/
MANUAL DOWN
1J5 DISPLAY BCD
D1
C1
B1
A1
D2
KEY
C2
B2
A2
1J6 DIGIT STROBES
STROBE 16
STROBE 15
STROBE 14
STROBE 13
STROBE 12
STROBE 11
KEY
STROBE 10
STROBE 9
1J7 DIGIT STROBES
STROBE 8
STROBE 7
STROBE 6
STROBE 5
STROBE 4
STROBE 3
STROBE 2
KEY
STROBE 1
1J8 SOUND SELECT AND DISPLAY COMMA SEGMENTS
COMMA 3 & 4
COMMA 1 & 2
KEY
N/C
N/C
N/C
N/C
N/C
SOUND SELECT 4
SOUND SELECT 3
SOUND SELECT 2
SOUND SELECT 1
SOUND SELECT 0
2J13 SPECIAL SWITCH INPUTS
2J12 SPECIAL SOLENOIDS (17 22)
FLIPPER CONTROL
2J11 SOLENOIDS (1 8)
2J10 SOLENOID GROUND
2J9 SOLENOIDS (9 16)
2J2 SWITCH COLUMNS
2J3 SWITCH ROWS
2J8 POWER INPUT
2J7 LAMP ROW DRIVE
2J6 LAMP GROUND
2J5 LAMP COLUMN DRIVE
2J4 LAMP B+
LAMP GROUND
+16 VDC LAMPS
SOLENOID GROUND

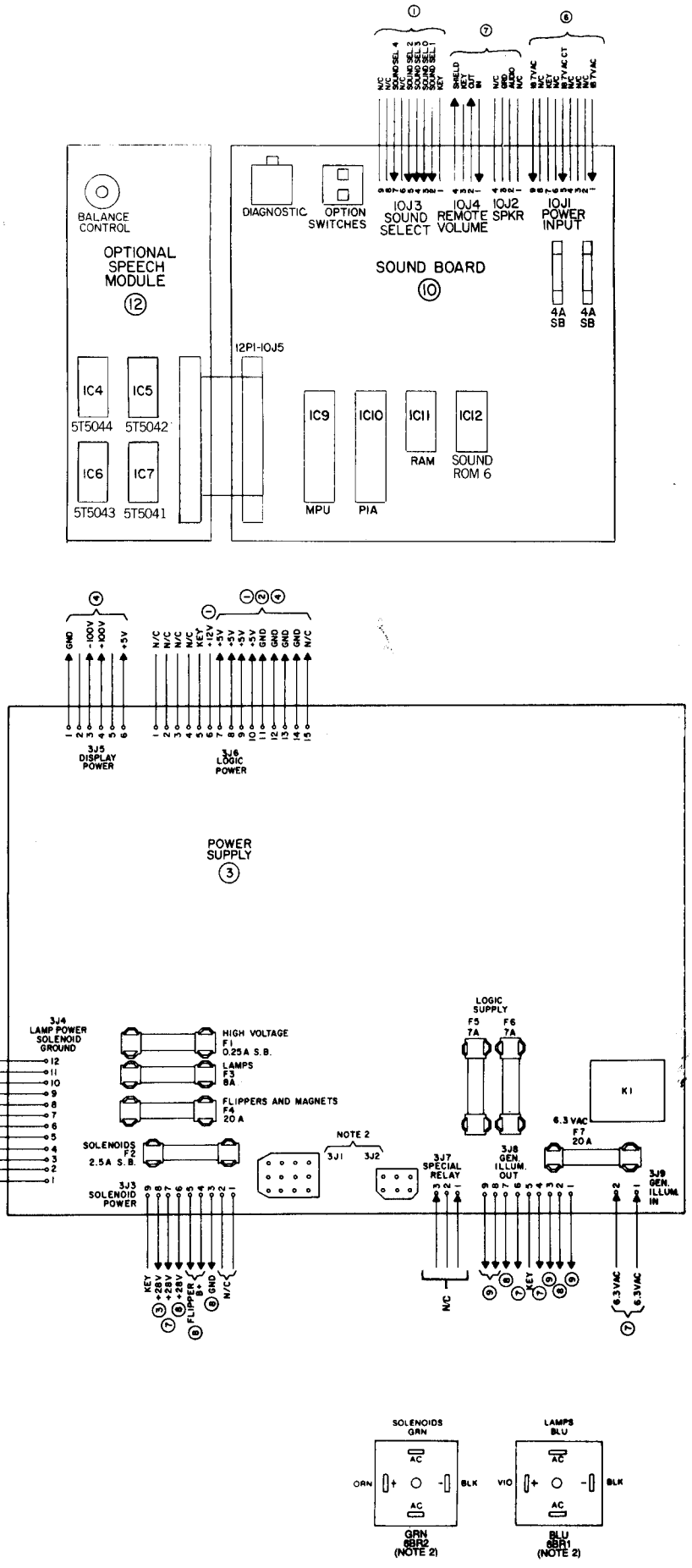

NOTES:

1. CONNECTIONS ARE INDICATED BY CIRCLED NUMBERS AS FOLLOWS:
   - (1) CPU BOARD
   - (2) DRIVER BOARD
   - (3) POWER SUPPLY BOARD
   - (4) MASTER DISPLAY BOARD
   - (5) SLAVE DISPLAY BOARD
   - (6) BACKBOX
   - (7) CABINET
   - (8) PLAYFIELD
   - (9) INSERT BOARD
   - (10) SOUND BOARD
   - (11) NOT ASSIGNED
   - (12) SPEECH MODULE
2. REFER TO POWER WIRING DIAGRAM FOR CONNECTIONS TO 3P1.

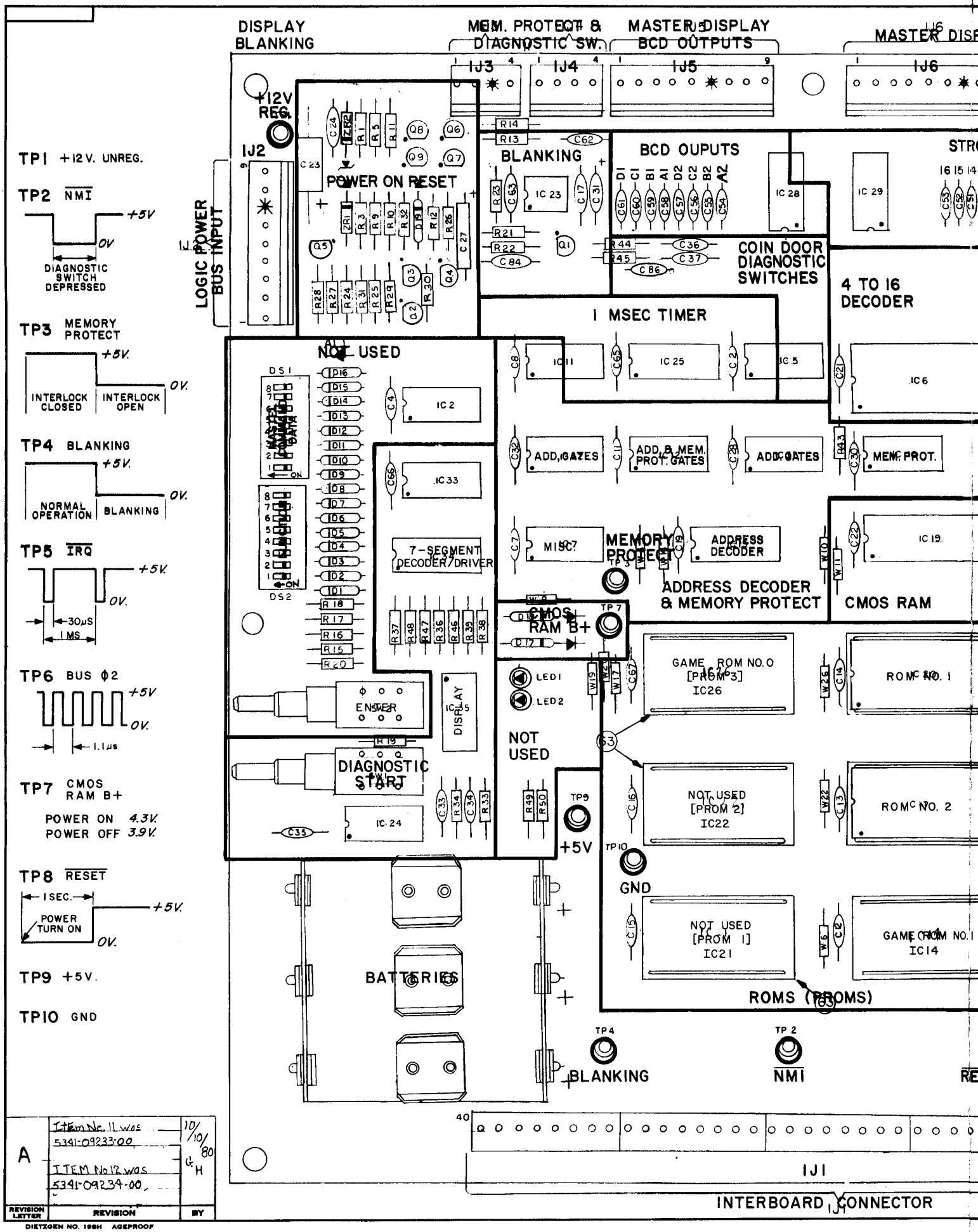

REVISION LETTER	REVISION	BY
A	ITEM No. 11 was 5341-09233-00, ITEM No 12 was 5341-09234-00,	10/10/80 GH

DIETZGEN NO. 196H AGEPROOF

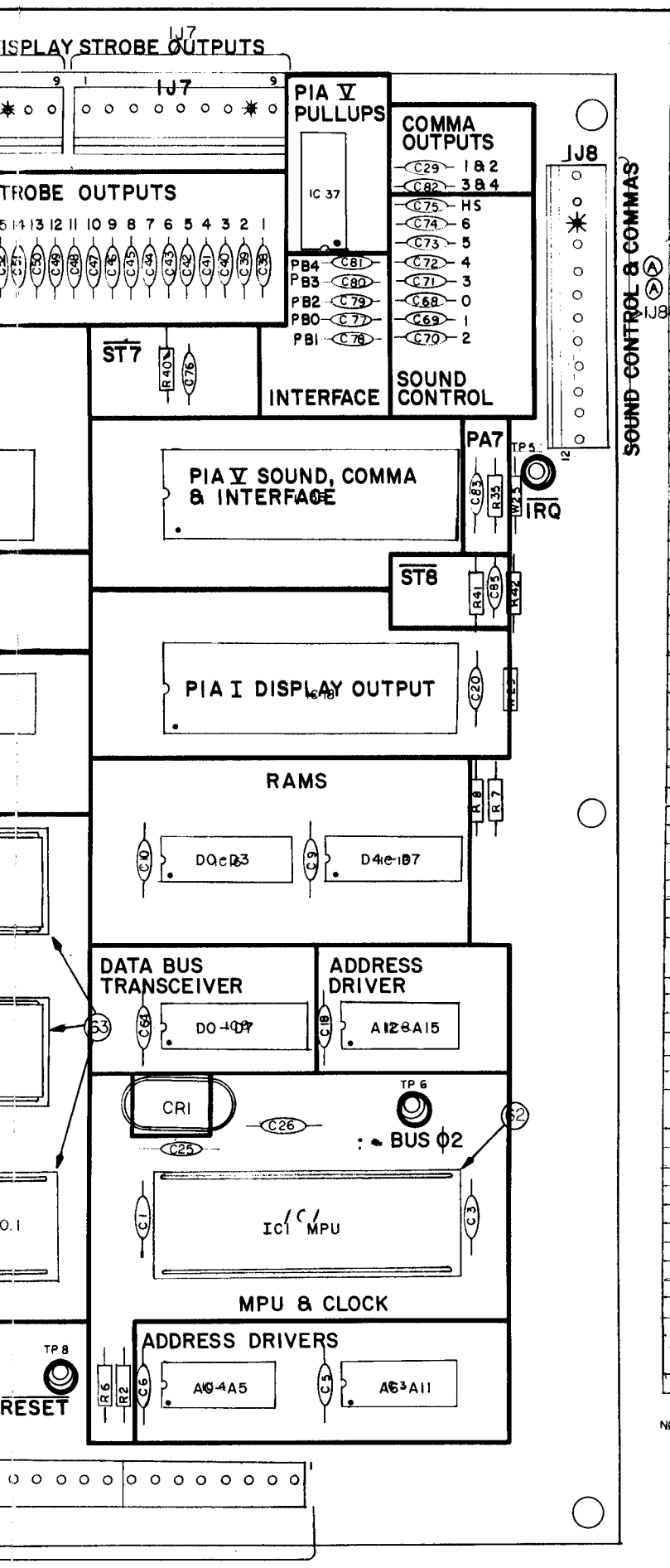

BILL OF MATERIAL

ITEM NO.	PART NO	PART DESIGNATION	DESCRIPTION	REQ'D NO.
1	5764-09465-X0		BARE P.C. BOARD CPU	1
2	5280-09408-X0	IC2	74125 HEX TRISTATE BUFFER	1
3	5370-08989-00	IC3,IC4,IC8	8T97 HEX TRISTATE BUFFER	3
4	5281-09308-X0	IC9	74LS245 OCTAL BUFFER	1
5	5280-09010-00	IC6	74154 4 TO 16 DECODER	1
6	5280-09013-00	IC7	7404 HEX INVERTER	1
7	5281-09235-00	IC11	74LS10 TRIPPLE 3 INVERTER	1
8	5280-08973-00	IC12	7408 QUAD AND	1
9	5340-09409-X0	IC13,IC16	2114-45 1K X4 STATIC RAM	2
10	5281-09246-00	IC15	74LS139 DUAL 2 TO 4 LINE DECODER	1
11	5341-09553-00	IC20	ROM 2K X8 LOWER	1
12	5341-09554-00	IC17	ROM 4K X8 UPPER	1
13	5430-08972-00	IC18,IC36	MC6821 PIA	2
14	5340-09017-00	IC19	MC 5101 CMOS RAM	1
15	5431-09449-00	IC23	MC 1455 P1 TIMER	1
16	5280-09073-00	IC24,IC32,IC33	7400 QUAD 2 INPUT NAND	3
17	5310-09236-00	IC25	4020 CMOS 14 BIT COUNTER	1
18	5310-09237-00	IC10	4071 CMOS QUAD 2 INPUT NOR	1
19	5281-09247-00	IC5,IC31	74LS02 QUAD 2 INPUT NOR	2
20	5280-09407-X0	IC34	7447 BCD TO 7 SEG LED DISP	1
21	5671-09411-00	IC35	MAN 72A 7 SEG LED DISP	1
22	5019-09238-00	IC28,IC29	13 DIP RES./PACK 4.7K OHM	2
23	5019-09223-00	IC37	15 DIP RES/PACK 10K OHM	1
24	5645-09025-00	DS1,DS2	8 STD DIP SWITCHES	2
25	5075-09018-00	ZR1	IN5996 ZENER DIODE 6.8V	1
26	5075-09059-00	ZR2	IN5990 ZENER DIODE 3.9V	1
27	5070-08919-00	D1-D17,D19	IN4148 DIODE	18
28	5160-08938-00	Q3-Q9	2N4401 NPN TRANSISTOR	7
29	5190-09016-00	Q1,Q2	2N4403 PNP TRANSISTOR	2
30	5070-09266-00	D18	IN5817 DIODE	1
31	5520-09020-00	CR1	CRYSTAL 3.58 MHZ	1
32	5010-09358-00	R5,R9,R20	RESISTOR FC 1K OHM 5% 1/4W	3
33	5010-08983-00	R2,R6-R8,R21,R28	RESISTOR FC 3.3K OHM 5% 1/4W	6
34	5010-08991-00	R13-R18,R29, R33-R35,R40-R42	RESISTOR FC 4.7K OHM 5% 1/4W	13
35	5010-09086-00	R22	RESISTOR FC 6.8K OHM 5% 1/4W	1
36	5010-09036-00	R19,R30	RESISTOR FC 100 OHM 5% 1/4W	2
37	5010-09187-00	R36-R39,R46-R50	RESISTOR FC 150 OHM 5% 1/4W	9
38	5010-09113-00	R23,R26	RESISTOR FC 33K OHM 5% 1/4W	2
39	5010-09034-00	R1,R3	RESISTOR FC 10K OHM 5% 1/4W	2
40	5010-09241-00	R25,R32,R10,R11	RESISTOR FC 22K OHM 5% 1/4W	4
41	5010-08998-00	R27	RESISTOR FC 2.2K OHM 5% 1/4W	1
42	5010-09039-00	R12	RESISTOR FC 10 OHM 5% 1/4W	1
43	5010-09442-00	R43	RESISTOR FC 330K OHM 5% 1/4W	1
44	5010-08997-00	R24,R31	RESISTOR FC 27K OHM 5% 1/4W	2
45	5010-09083-00	R44,R45	RESISTOR FC 470 OHM 5% 1/4W	2
46	5043-08980-00	C1-C22,C28,C30 C32-C37,C63-C67 C83	CAPACITOR CERAMIC .01MFD 50V	36
47	5040-08986-00	C23	CAPACITOR ELECT. 100 MFD 10V	1
48	5043-08996-00	C24	CAPACITOR CERAMIC 1 MFD 50V	1
49	5043-09169-00	C25 C26	CAPACITOR CERAMIC 27 PFD 1KV	2
50	5041-09243-00	C27	CAPACITOR TANT. 10 MFD 10V	1
51	5041-09031-00	C31	CAPACITOR TANT. 1MFD 25V	1
52	5043-09030-00	C84	CAPACITOR CERAMIC .047MFD 50V	1
53	5043-09065-00	C29,C38-C62 C68-C82,C85,C86	CAPACITOR CERAMIC 470PFD 50V	43
54	5671-09019-00	LED1,LED2	LED RED	2
55	SEE NOTE	SW1,SW2	SWITCH MOMENTARY	2
56	5881-09021-00		BATTERY HOLDER #171	1
57	5791-09026-00	IJ1	HEADER 09-64-1083 8 PIN	5
58	5791-09028-00	IJ3,IJ4	HEADER 09-65-1041 4 PIN	2
59				
60	5791-09027-00	IJ2,IJ5-IJ7	HEADER 09-65-1091 9 PIN	4
61	5791-09043-00	IJ8	HEADER 09-65-1121 12 PIN	1
62	5700-08985-00		40 PIN IC SOCKET	1
63	5700-09004-00		24 PIN IC SOCKET	6
64	5010-09534-00	W3,W6,W8,W10,W11, W14,W17,W19,W20, W25,W26,W29,W22	RESISTOR FC 0 OHM 1/4W	13
65	5824-09248-00	TP1-TP10	TEST TERMINALS #1502-1	10

NOTE: USE EITHER 5641-09312-00, 5641-09024-00 OR 5641-09371-00

TOLERANCES	QTY.	ASSEMBLE ON
UNLESS OTHERWISE SPECIFIED		
FRACTIONAL ±1/64"		
DECIMAL .X ±.005"		
HOLE DIA. .XX ±.003" .XXX ±.000"		
ANGULAR ±1/2°		
CONCENTRICITIES T.I.R. .005"		
SCREW THREADS CLASS 2		

WILLIAMS ELECTRONICS, INC.
SUBSIDIARY OF THE SEEBURG CORP.
3401 N. CALIFORNIA CHICAGO, ILL. 60618 267-2240

NAME PIN BALL CPU SUB-ASSEMBLY

MATERIAL	HEAT TREATMENT	FINISH

DWN.	DATE	APP'D.	SCALE	
S HOBBS	9-20-80			D-8342

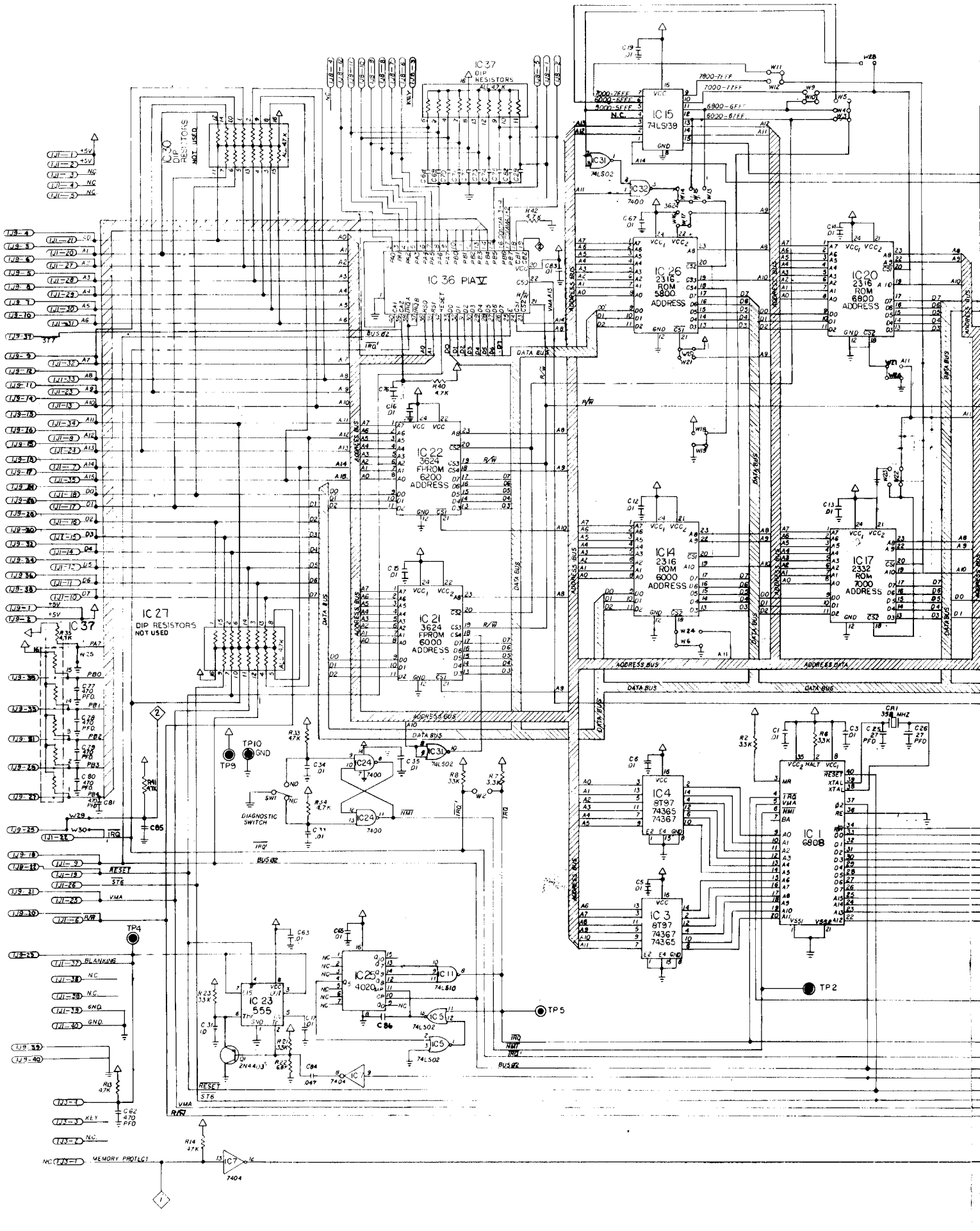
IC 37
DIP RESISTORS
IC 30
DIP RESISTORS
NOT USED
IC 36 PIA V
IC 15
74LS139
IC 26
2316
ROM
5800
ADDRESS
IC 20
2316
ROM
6800
ADDRESS
IC 22
3624
FPROM
6200
ADDRESS
IC 21
3624
FPROM
6000
ADDRESS
IC 14
2316
ROM
6000
ADDRESS
IC 17
2332
ROM
7000
ADDRESS
IC 27
DIP RESISTORS
NOT USED
IC 37
IC 4
8T97
74365
74367
IC 1
6808
IC 3
8T97
74367
74365
IC 25
4020
IC 23
555
DIAGNOSTIC SWITCH
ADDRESS BUS
DATA BUS
ADDRESS DATA
BUS Ø2
RESET
ST6
VMA
BLANKING
KEY
MEMORY PROTECT
TP2
TP4
TP5
TP9
TP10
GND

NOTES:
1. ALL RESISTORS, 1/4 WATT UNLESS NOTED OTHERWISE.
2. ALL CAPACITORS, MFD. UNLESS NOTED OTHERWISE.
3. WHEN USING WHITE, YELLOW OR GREEN LABEL PROGRAMS
   REMOVE -W10,W11,W14,W17,W19,W20,W22
   CONNECT: W9,W12,W15,W16,W18,W21,W23
   FOR FIREPOWER ONLY- ALSO REMOVE W3 & CONNECT W4.

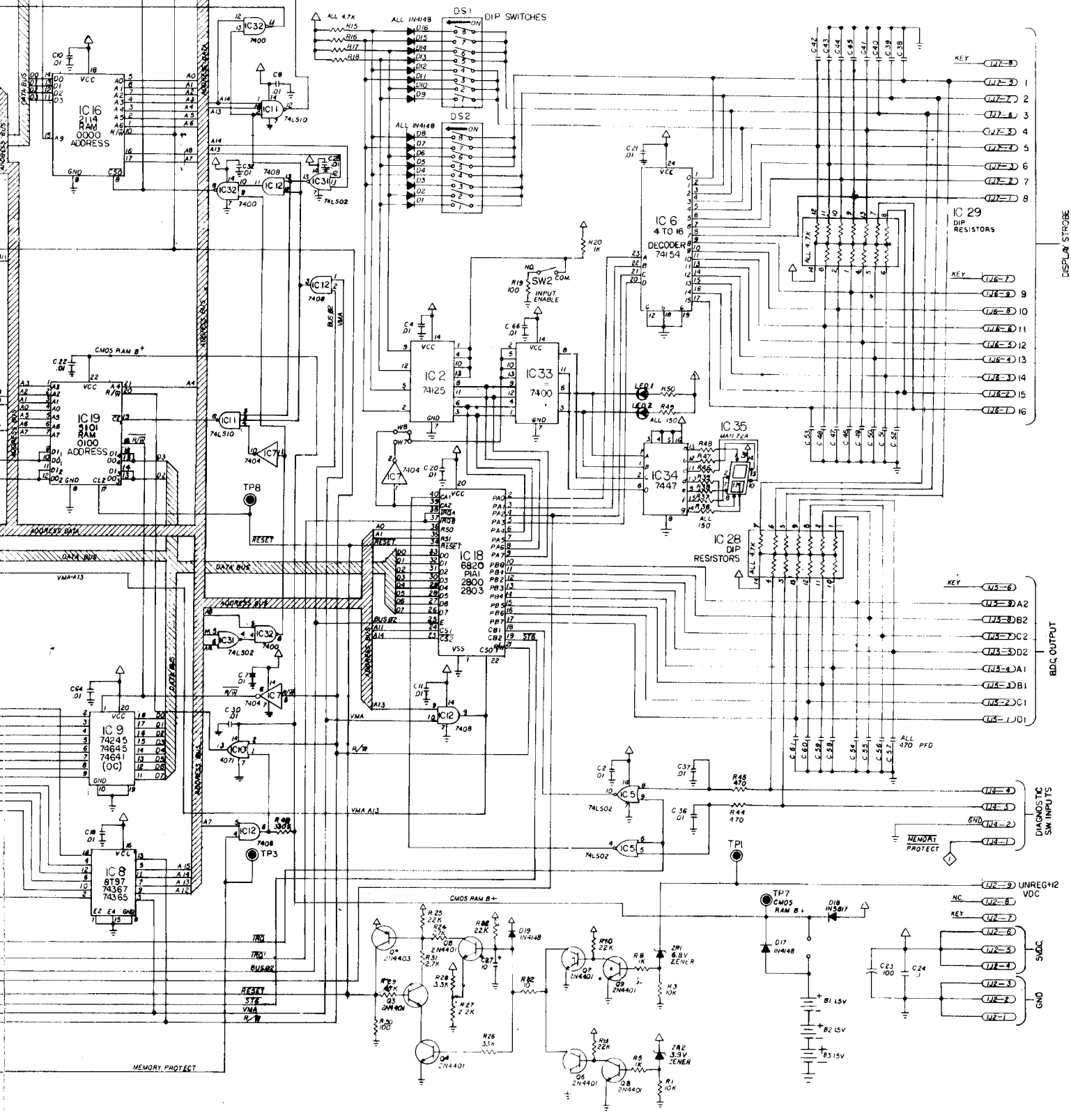

CPU Board Logic Diagram
9

REVISION LETTER	REVISION
C	REVISED AND REDRAWN R. GAY 11-28-77
D	ITEM NO. 28, PT. NO. WAS 5A-8999 & ADDED MOUNTING NOTE FOR R149 THRU R156. R. GAY 4-11-78
E	DELETED ITEM NO. 36, PT. NO. 5A-8985. E.C.O. R. GAY 9-12-78
F	ADDED ITEM NO. 36 & ITEM NO 22, DELETED (8) RESISTORS & QTY. WAS 32 E.C.O. 4624 R. GAY 10-4-78

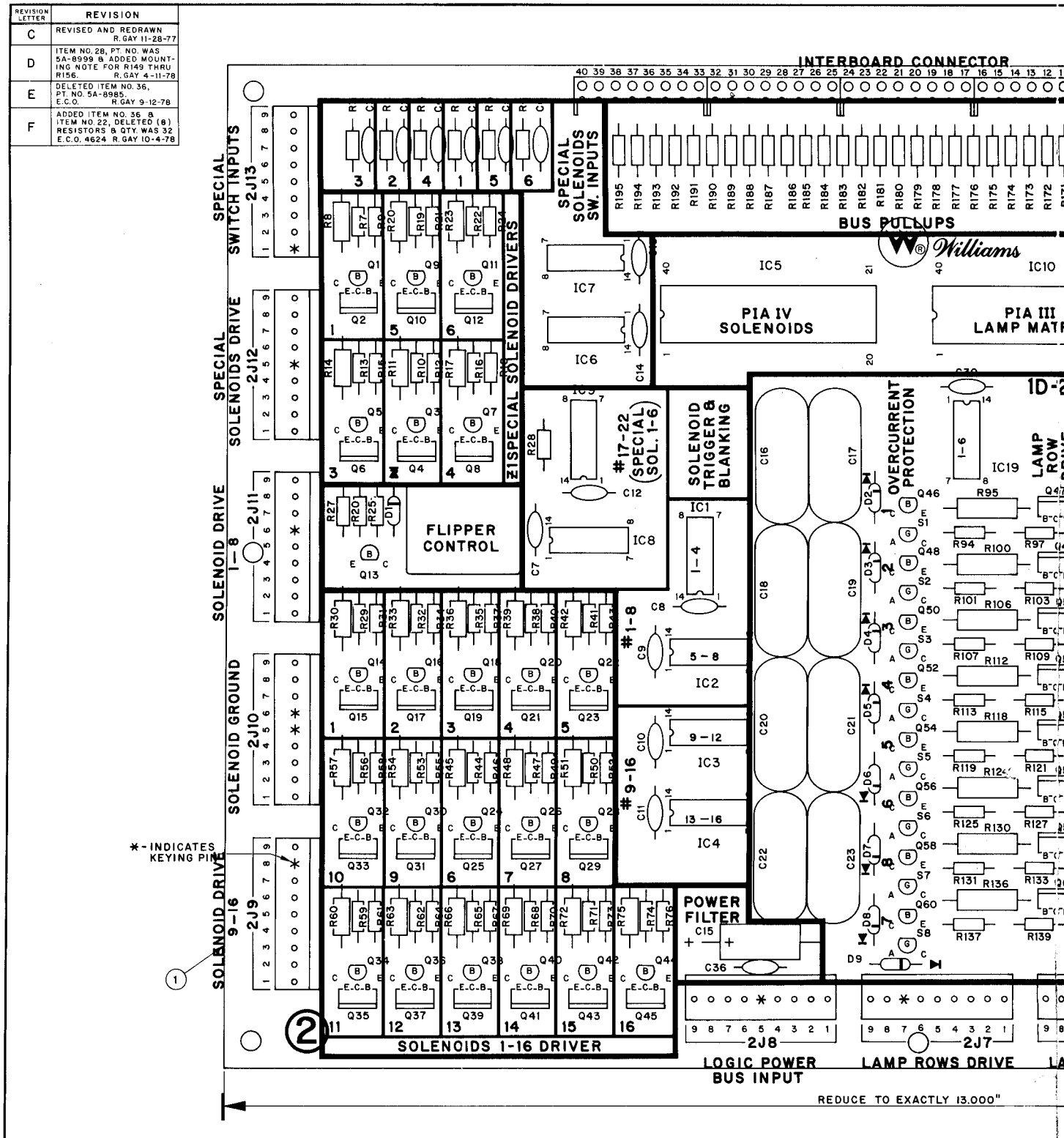

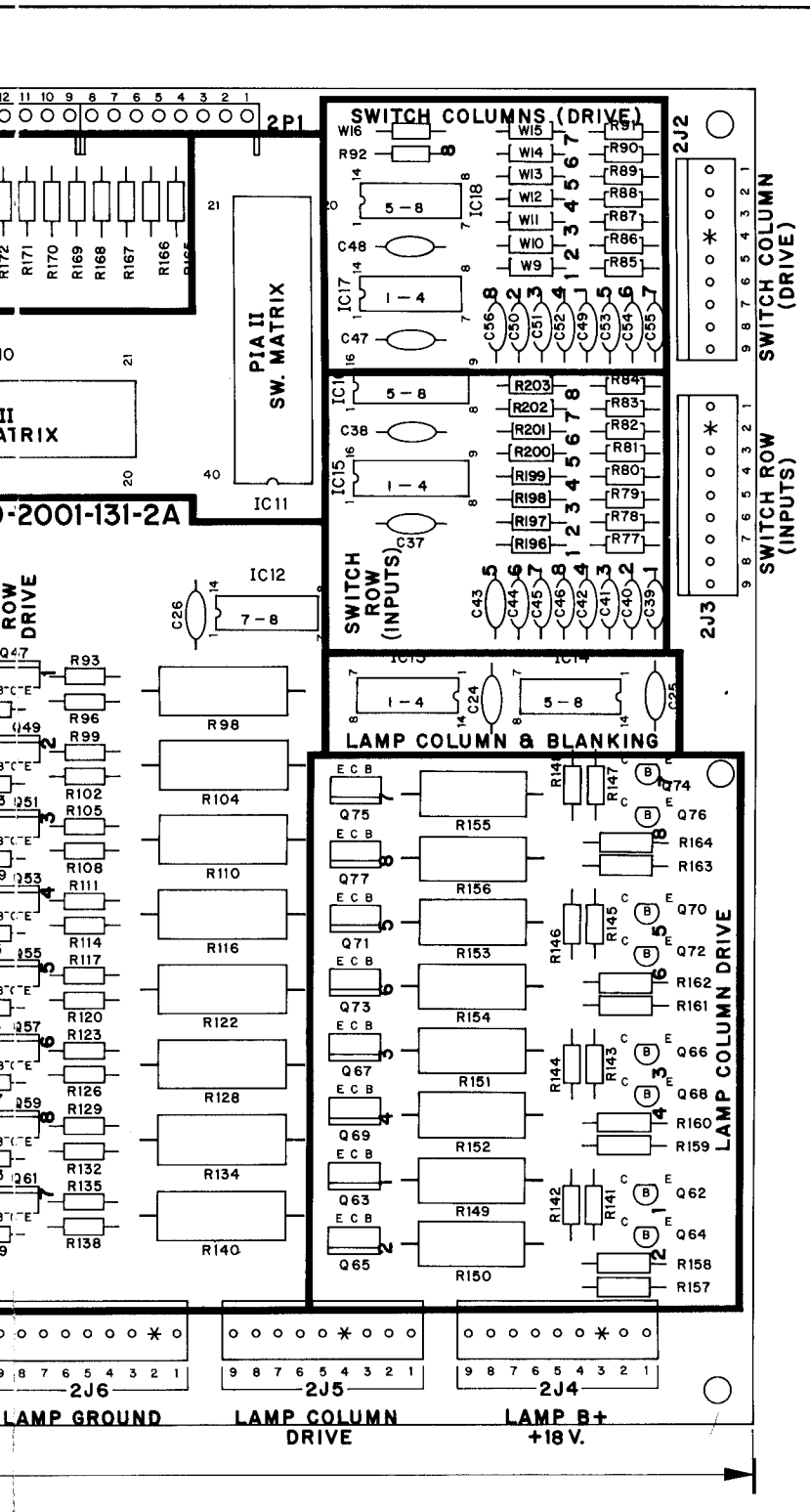

BILL OF MATERIAL

ITEM NO.	PART NO.	PART DESIGNATION	DESCRIPTION	REQ'D. NO.
1	18-2001-131		BARE P.C. BOARD	1
2	5A-8948	IC8, IC9	N7402 QUADRUPLE 2 INPUT POSITIVE NOR GATE	2
3	5A-8974	IC12, IC17, IC18, IC19	N7406 HEX. INVENTER BUFFER DRIVERS W/OPEN COLLECTOR HIGH VOLTAGE OUTPUTS	4
4	5A-8973	IC1 THRU IC4, IC6, IC7, IC13, IC14	N7408 QUADRUPLE 2 INPUT POSITIVE AND GATE	8
5	5A-8975	IC15, IC16	MC14049 INVERTING HEX BUFFER	2
6	5A-8972	IC5, IC10, IC11	MC6820 PERIPHERAL INTERFACE ADAPTER	3
7	5A-8938	Q1, Q3, Q5, Q7, Q9, Q11 Q13, Q14, Q16, Q18, Q20, Q22, Q24, Q26, Q28, Q30, Q32, Q34, Q36, Q38, Q40, Q42, Q44	2N4401 NPN TRANSISTOR	23
8	5A-8976	Q46, Q48, Q50, Q52, Q54, Q56, Q58, Q60, Q62, Q64, Q66, Q68, Q70, Q72, Q74, Q76	2N6427 DARLINGTON NPN TRANSISTOR	16
9	5A-8977	Q2, Q4, Q6, Q8, Q10, Q12, Q15, Q17, Q19, Q21, Q25, Q27, Q29, Q31, Q33, Q35, Q37, Q39, Q41, Q43, Q45	TIP122 DARLINGTON NPN POWER TRANSISTOR	22
10	5A-8978	Q63, Q65, Q67, Q69, Q71, Q73, Q75, Q77,	TIP42 PNP POWER TRANSISTOR	8
11	5A-8979	Q47, Q49, Q51, Q53, Q55, Q57, Q59, Q61	2N6122 NPN POWER TRANSISTOR	8
12	5A-6258	D1	1N4001 DIODE	1
13	5A-8919	D2 THRU D9	1N4148 DIODE	8
14	5A-9014	S1 THRU S8	2N5060 SCR	8
15	5A-8980	C1 THRU C14, C24, THRU C26, C30, C37, C38, C47, C48	CAPACITOR, CERAMIC, .01 MFD. +80 -20 % 50 V.	22
16	5A-8995	C16 THRU C23	CAPACITOR, POLYESTER FILM, .1 MFD. 10 %	7
17	5A-9065	C27 THRU C46, C49 THRU C56	CAPACITOR, CERAMIC, 470 PFD. 20% 50 V.	16
18	5A-8986	C15	CAPACITOR, ELECT., 100 MFD. 10 V.	1
19	5A-8996	C36	CAPACITOR, CERAMIC, 1 MFD. +80 -20 % 50 V.	1
20	5A-8991	R1 THRU R6, R27, R77 THRU R92, R157 THRU R195	RESISTOR, FC, 4.7 K OHM 10% 1/4 W	62
21	5A-8983	R27	RESISTOR, FC, 3.3 K OHM 10% 1/4 W	1
22	5A-8984	R96, R97, R102, R103, R108, R109, R114, R115, R121, R122, R126, R127, R132, R133, R138, R139, R196 THRU R203	RESISTOR, FC, 1K OHM 10% 1/4 W	24
23	5A-8992	R7, R10, R13, R16, R19, R22, R29, R32, R35, R38, R41, R44, R47, R50, R53, R56, R59, R62, R65, R68, R71, R74	RESISTOR, FC, 560 OHM 10% 1/4 W	22
24	5A-8993	R8, R11, R14, R17, R20, R23, R30, R33, R36, R39, R42, R45, R48, R51, R54, R57, R60, R63, R66, R69, R72, R75	RESISTOR, FC, 68 OHM 10% 1/2 W	22
25	5A-8997	R9, R12, R15, R18, R21, R24, R25, R31, R34, R37, R40, R43, R46, R49, R52, R55, R58, R61, R64, R67, R70, R73, R76	RESISTOR, FC, 2.7 K OHM 10% 1/4 W	23
26	5A-8817	R26	RESISTOR, FC, 10 K OHM 10% 1/4 W	1
27	5A-8998	R141 THRU R148	RESISTOR, FC, 2.2 K OHM 10% 1/4 W	8
★ 28	5A-8999-1	R149 THRU R156	RESISTOR, FC, 27 OHM 10% 2 W	8
29	5A-9084	R95, R100, R106, R112, R118, R124, R130, R136	RESISTOR, FC, 100 OHM 10% 3 W	8
30	5A-9085	R93, R99, R105, R111, R117, R123, R129, R135	RESISTOR, FC, 1.5 K OHM 10% 1/4 W	8
31	5A-9086	R94, R101, R107, R113, R119, R125, R131, R137	RESISTOR, FC, 6.8 K OHM 10% 1/4 W	8
32	5A-9037	R98, R104, R110, R116, R122, R128, R134, R140	RESISTOR, WIREWOUND, .4 OHM 10% 3 WATT	8
33	5A-8994	Z1	RELAY - 4 POLE - 5 AMP. CONTACTS 40 OHM COIL 6 V.D.C.	1
34	5A-9066	2P1	8 PIN RECEPTACLE	6
35	5A-9027	2J2 THRU 2J13	9 PIN HEADER	12
36	5A-9534	W9 THRU W16	RESISTOR, FC, 0 OHM, 1/4 W	8

★ R149 THRU R156 MUST BE MOUNTED 1/8" ABOVE SURFACE OF BOARD.

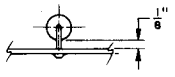

WILLIAMS ELECTRONICS, INC.
SUBSIDIARY OF XCOR CORPORATION
3401 N. CALIFORNIA CHICAGO, ILL. 60618 CORNELIA 7-2240

PART NAME: DRIVER BOARD ASSEMBLY

DWN.	DATE	APP'D.	SCALE	PART NO.
R. Gay	8-16-77		2=1	D-7997

16-7997

DOCUMENT #2

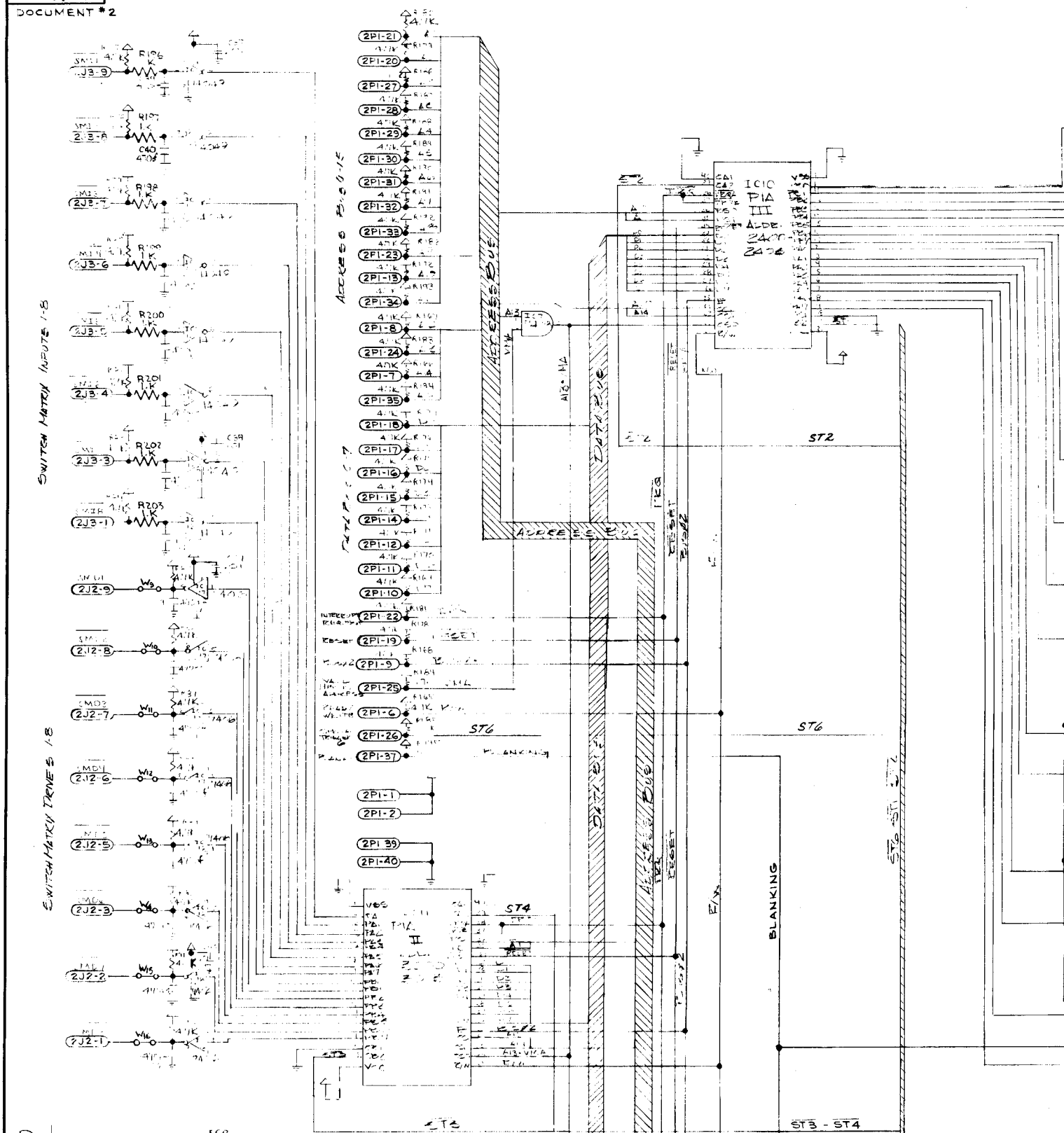

REVISION LETTER	REVISION	BY
D 10-4-78	R 204 THRU R 211, 300 Ω WAS 1K Ω	ECO #4624 AR
C 10-28-77	2P1's WAS P's, 2J2's WAS A's, 2J3's WAS B's, 2J4's WAS C's, 2J5's WAS D's, 2J6's WAS E's, 2J7's WAS F's, & ADDED CIRCUITS TO ALL 2N6122 & TIP42 TRANSISTOR & "TO/FROM SHEET 2"	R GAH
B 8-25-77	DELETED +5V LEAD & ADDED VOLT LAMP V_{CC} LEAD TO R93-R95, R99-R101, R106-R107, R111-R113, R117-R119, R123-R125, R129-R131 & R135-R137	R GAH
A 8-16-77	REDUCE POWER SUPPLY CURRENT	DLP
F	R196 THRU R 203 WAS W_1 THRU W_8 (12-17-80)	ECO # 5064
E	W_1 THRU W_{16} WAS R196 THRU R 211	ECO # 5013 TMH/TM

DIETZGEN NO. 100-M ACEPROOF

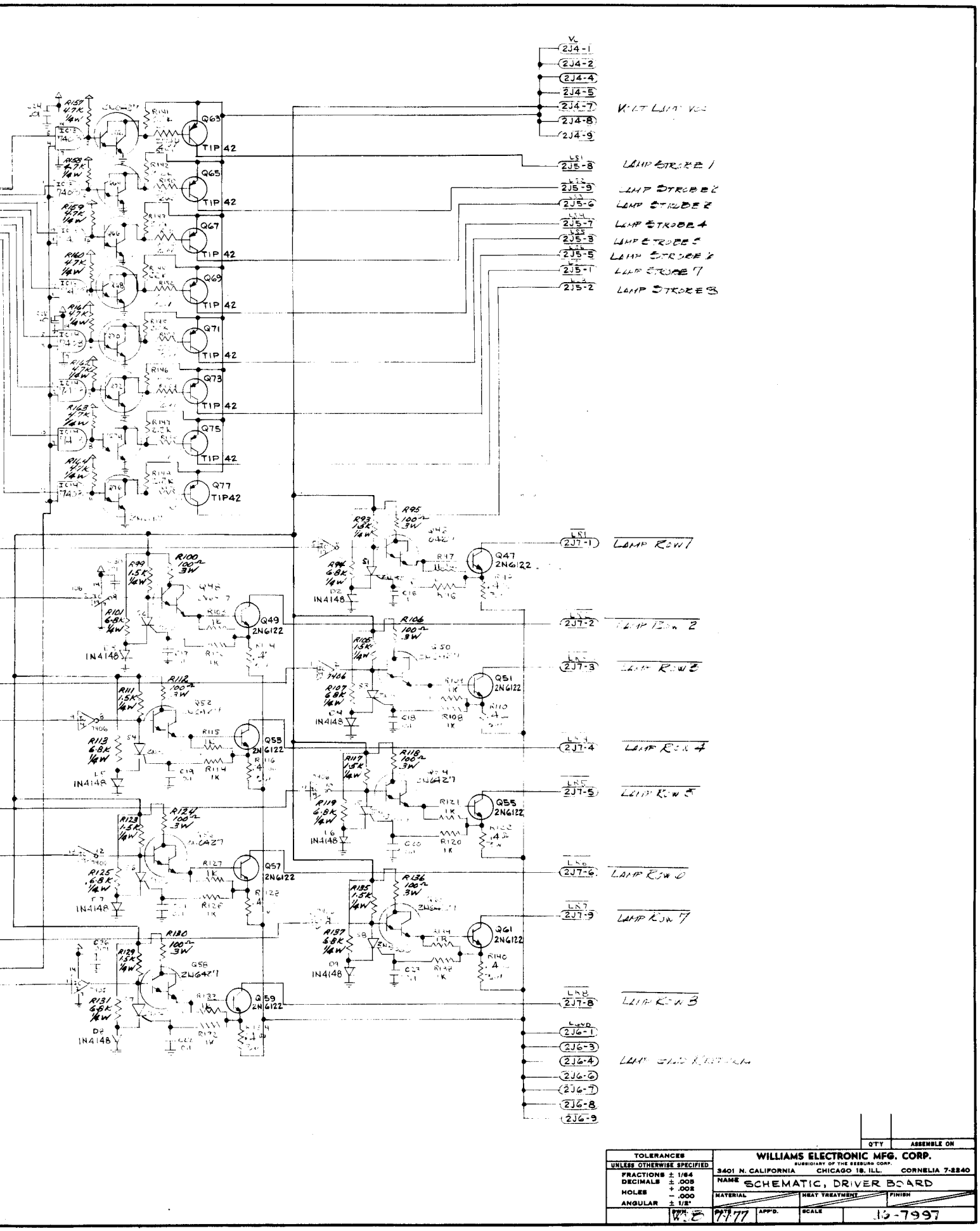

Driver Board Logic Diagram
(Sheet 1 of 2) 11/12

16D-7997
DOCUMENT #2

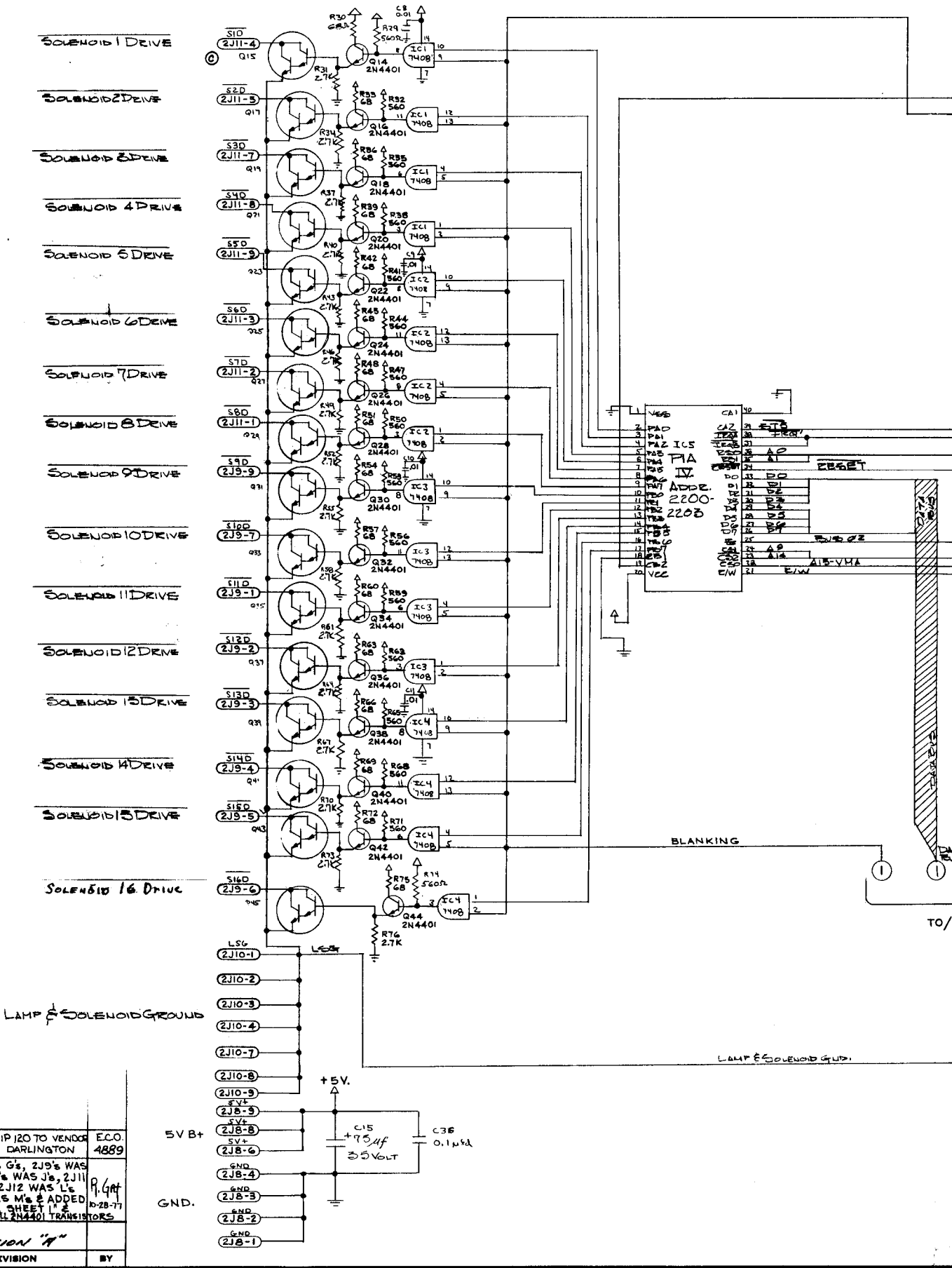

REVISION LETTER	REVISION	BY
C	CHANGE TIP 120 TO VENDOR SELECTED DARLINGTON	E.C.O. 4889
B	2J8's WAS G's, 2J9's WAS H's, 2J10's WAS J's, 2J11 WAS K's, 2J12 WAS L's, 2J13's WAS M's & ADDED "TO/FROM SHEET 1" & CIRCLES TO ALL 2N4401 TRANSISTORS	R. Gatt 10-28-77
A 8-24-77	REVISION "A"	

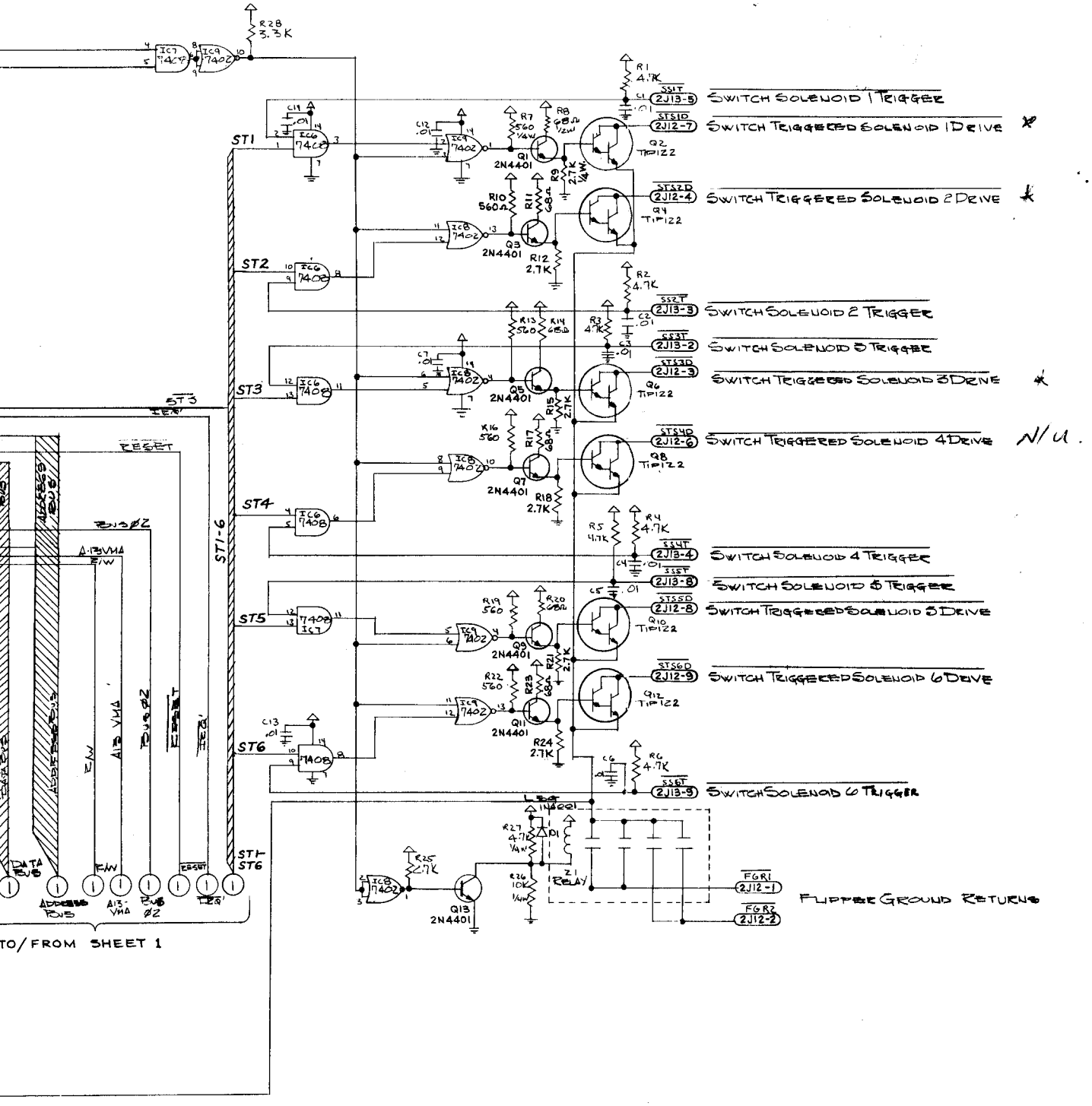

TOLERANCES UNLESS OTHERWISE SPECIFIED	WILLIAMS ELECTRONIC MFG. CORP. SUBSIDIARY OF THE BEEBURG CORP.
FRACTIONS ± 1/64	3401 N. CALIFORNIA CHICAGO 18, ILL. CORNELIA 7-2340
DECIMALS ± .005	NAME SCHEMATIC, DRIVER BOARD
HOLES + .002 − .000	MATERIAL / HEAT TREATMENT / FINISH
ANGULAR ± 1/2°	DWN. WJB 9-28-77 APP'D. SCALE 16D-7997

Q'TY ASSEMBLE ON

SHEET 2 OF 2

Driver Board Logic Diagram (Sheet 2 of 2) 13

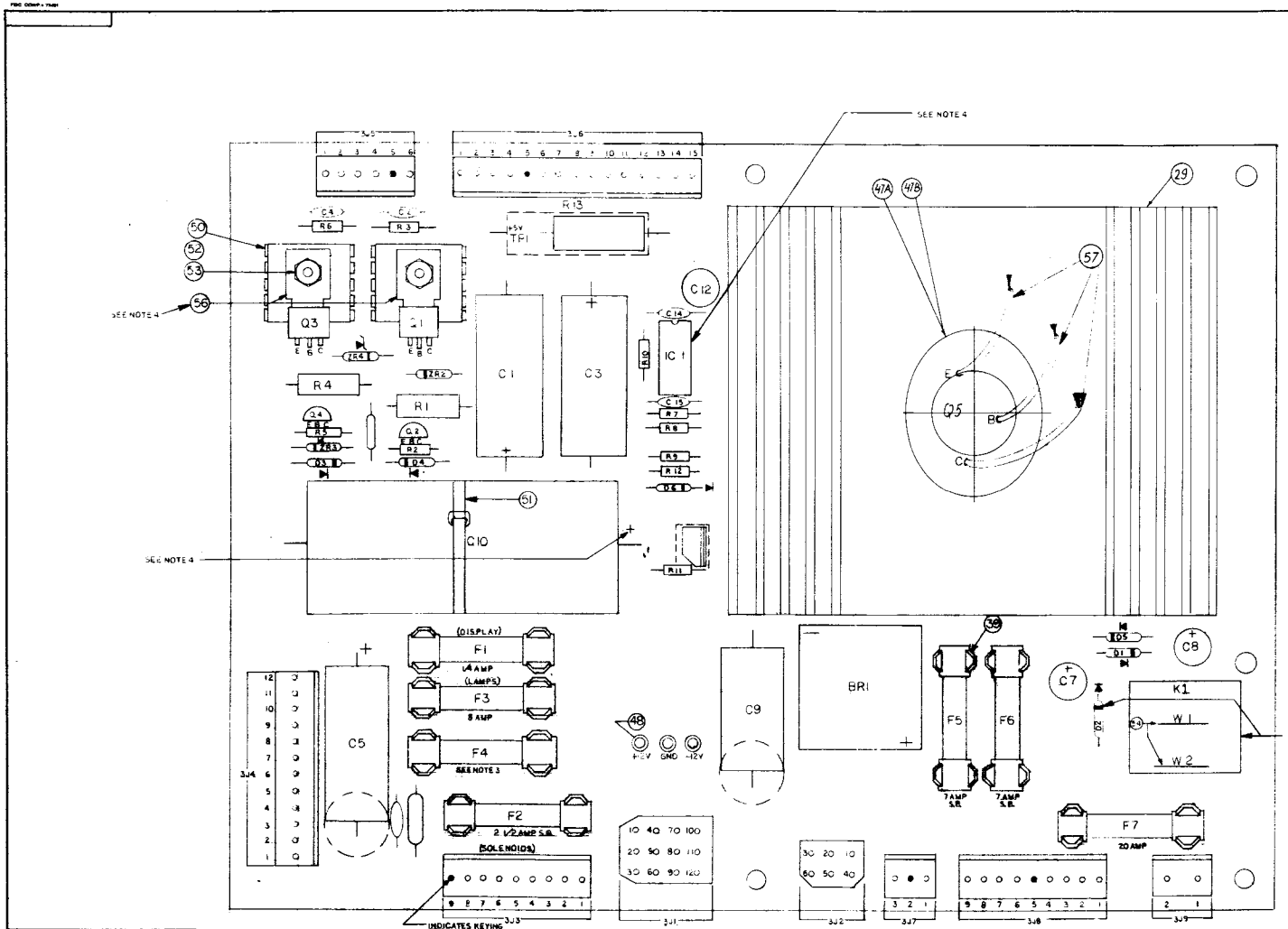

BILL OF MATERIAL

ITEM NO.	PART NO.	PART DESIGNATION	DESCRIPTION	REQ'D PER
	5765-09466-X		BARE P.C. BOARD	1
2	5013-09426-00	R7	RESISTOR 2.15K ±1% 1/4W METAL FILM	1
3	5013-09427-00	R8	RESISTOR 4.99 K ±1% 1/4W METAL FILM	1
4	5010-09428-00	R11	RESISTOR 1.5K ± 2% 1/4W CARBON FILM	1
5	5010-09085-00	R10	RESISTOR 1.5K ± 5% 1/4W	1
6	5010-09541-00	R9	RESISTOR 2.7K ± 2% 1/4W	1
7	5010-09508-00	R12	RESISTOR 270 OHMS ± 2% 1/4W FILM	1
8	5012-09429-00	R13	POWER RESISTOR 4.2 OHMS ± 5% 5W	1
9	5012-09536-00	R1, R3	RESISTOR 39K ± 5% 1W	2
10	5010-09068-00	R4, R5	RESISTOR 680 OHMS ± 1/2 W	2
11	5010-09069-00	R6, R16	RESISTOR 330K 5% 1/2 W	2
12	5040-09419-00	C10	CAP ELECTROLYTIC 18,000 MFD 20V RADIAL	1
13	5040-09427-00 5040-08893-00	C9	CAP ELECTROLYTIC 1,000 MFD 25V RADIAL OR AXIAL	1
14	5040-09429-00	C12	CAP ELETROLYTIC 330 MFD 10V RADIAL	1
15	5043-90690-00	C15	CAPACITOR 470 pf.	1
16	5040-90931-00	C1, C3	CAPACITOR 100 MFD ELECT. 150V	2
17	5040-90700-00 5043-09537-00	C5	CAPACITOR 100 MFD ELECT. 100V OR RADIAL	1
18	5070-09445-00	C14	CAPACITOR .1MFD. 50V DISC.	1
19	5070-06458-00	D1, D2, D3, D4, D5, D6	DIODE IN4001	6
20	5075-09059-00	ZR1, ZR3	ZENER IN5990, 3.9V ± 5%	2
21	5075-09060-00	ZR2, ZR4	ZENER IN4764 100V ± 5%	2
22	5060-09424-00	C1	VOLTAGE REGULATOR MC1723 PC	1
23	5043-09443-00	C2, C4, C6	CAPACITOR 0.1UF 200V DISC	3
24	5040-09421-00	C7	CAPACITOR 100 UF 25V RADIAL	1
25	5164-09057-00	Q1	TRANSISTOR SDS-201 NPN	1
26	5164-09058-00	Q4	TRANSISTOR MPS 002 NPN	1
27	5194-09058-00	Q3	TRANSISTOR, SDS 202 PNP	1
28	5194-09055-00	Q2	TRANSISTOR MPS 052 PNP	1
29	5705-04431-00		HEAT SINK	1
30	5791-09067-00	J1, J5	CONNECTOR 6 PIN(M)	1
31	5791-09074-00	J4, J6	CONNECTOR 15 PIN(M)	1
32	5791-09087-00	J2, J3, J7	CONNECTOR, 9 PIN(M)	2
33	5791-09038-00	J8, J9	CONNECTOR, 6 PIN(M)	1
34	5162-09425-00	Q5	TRANSISTOR, POWER, 2N6087 NPN	1
35	5791-09043-00	J4	CONNECTOR 12 PIN(M)	1
36	5791-09435-00	J1, J7	CONNECTOR, 3 PIN(M)	1
37	5791-09436-00	J2, J9	CONNECTOR 2 PIN(M)	4
38	5791-09068-00	J3, J5	CONNECTOR, 12 PIN	1
39	5730-09178-00		FUSE HOLDER	14
40	5730-09128-00	F2	FUSE 2-1/2 AMP. S.B.	1
41	5730-09071-00	F3	FUSE 8 AMP.	1
42	5730-06508-00 5730-06567-00	F4	FUSE 10 AMP, 15 AMP	1
43	5730-09127-00	F7	FUSE 20 AMP	1
44	5731-08761-00	F1	FUSE 20 AMP	1
45	5017-09061-00	VR1	VARISTOR	1
46A	5700-09445-00		SOCKET	
47B	5701-09538-00		MICA INSULATOR	
47	5580-09555-00	K1	RELAY 24VDC 10 AMP DPDT	1
48	5824-09248-00		TERMINAL #1502-1 (TEST POST)	3
49	5100-09418-00	BR-1	BRIDGE RECTIFIER 35AMPS 100V	1
50	5705-09042-00		HEAT SINK	2
51	34-7520-1		TIE WRAP	1
52	4005-0106-07		5-40 X 7/16 RH. MSCH. SCREW	2
53	2405-0117-00		5-40 HEX NUT	2
54		W1, W2	JUMPER #18 AWG	2
55	5040-09422-00	C8	CAPACITOR 47 UF 50V RADIAL	1
56	20-9229		THERMAL COMPOUND	
57			LEAD WIRE #18 AWG (3')	3
58	5731-09432-00	F6, F5	FUSE 7A SB 250V	2

SEE NOTE 4 — SEE NOTE 2 EX — SEE NOTE 2

NOTES:
1. HEAT SINK COMPOUND MUST BE APPLIED BE AFFIELD BETWEEN TRANSISTOR AND HEAT SINK.
2. FOR BLACKOUT AND FUTURE SALES WITH SAME FEATURE REMOVE JUMPERS (W1 AND W2) AND INSERT RELAY K1 DIODE DESATIC 3-7
3. ON FLIP FER SAMES F1 : 10 AMPS ON (DUAL ACTION FLIPPERS) 15 AMPS ON SHUFFLE ALLEYS F4 IS 20 AMPS.
4. OBSERVE INDEX MARK OF INTEGRATED CIRCUIT, POLARITY OF CAPACITORS, DIODES AND POSITION OF TRANSISTORS.
5. REFERENCE DWGS: SCHEMATIC 16-8786

DRAWING	REVISION & NO.				
PCB	0				
SCHEMATIC	0				
PCA	0				
PL	0				

REVISION DRAWINGS: SCHEMATIC 168786-00

REVISION LETTER	REVISION	BY
A	ITEM #42 PART NO. WAS 5730-06508-00 5730-06567-00 & DESCRIPTION CHANGE ITEM #47 DESCRIPT. CH. CHANGE. ITEM #48 PART NO. WAS 5010-09429-00 ITEM #49 PART NO. WAS 5010-09421-00 ITEM #23 REVISED DESCRIPTION ITEM #41 PART NO. WAS 5730-09071-00	G.H.
9-23-80		

TOLERANCES: UNLESS OTHERWISE SPECIFIED — FRACTIONAL ± 1/64 — DECIMAL .X ± .060, .XX ± .030 — ANGULAR ± 1/2° — CONCENTRICITIES .XX ± .005 — IN NON THREADED DIA. ± .002

WILLIAMS ELECTRONICS, INC.
3401 W. CALIFORNIA CHICAGO, ILL. 60618 CORNELIA 7-2260

NAME: POWER SUPPLY BOARD SUB-ASSEMBLY

MATERIAL — HEAT TREATMENT — FINISH

DWN: G.H. CHK: BS — DATE: 9-27-80 — APP'D. — SCALE

SIZE — DWG. NO. — REV. — SHT.

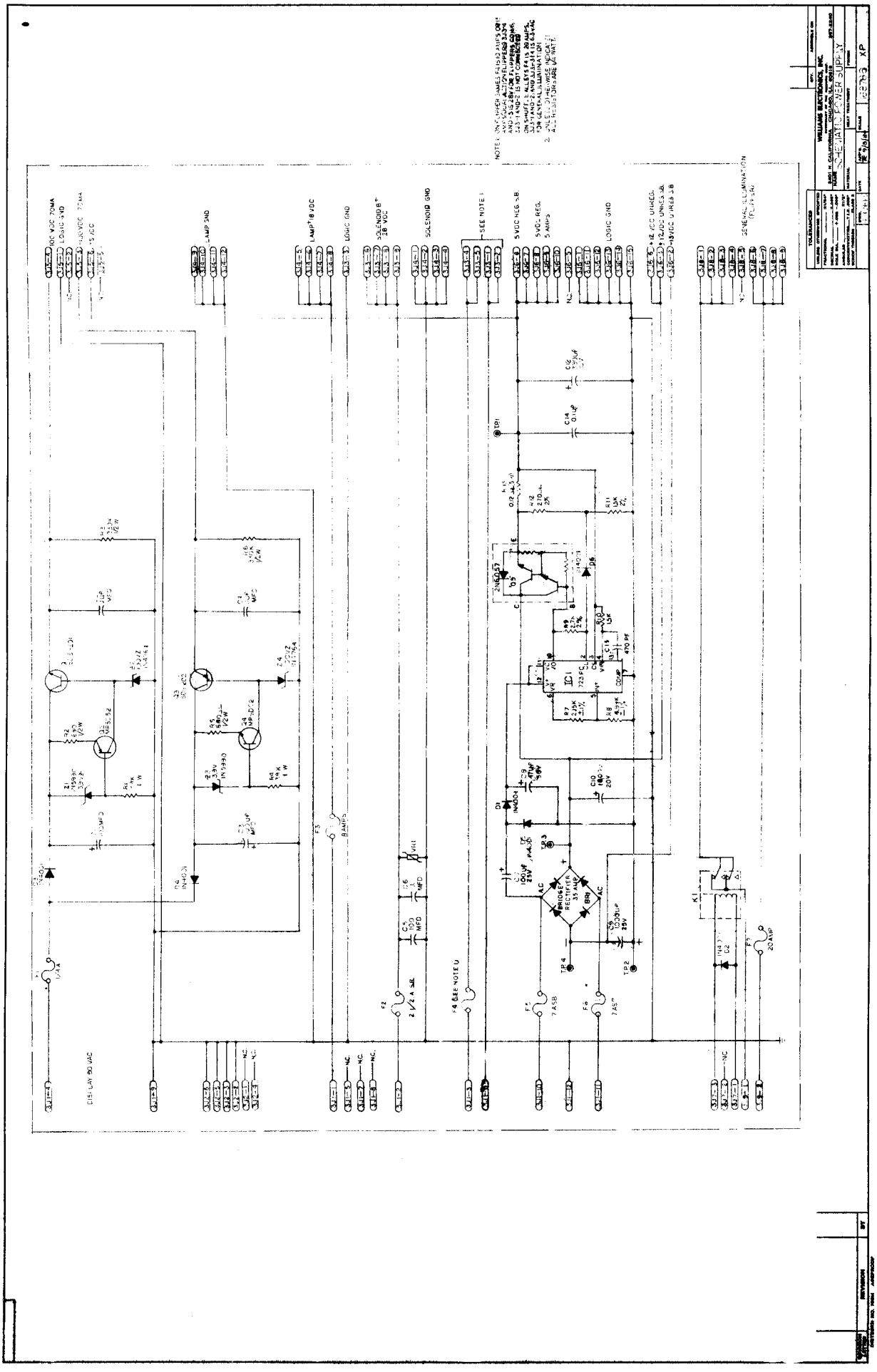

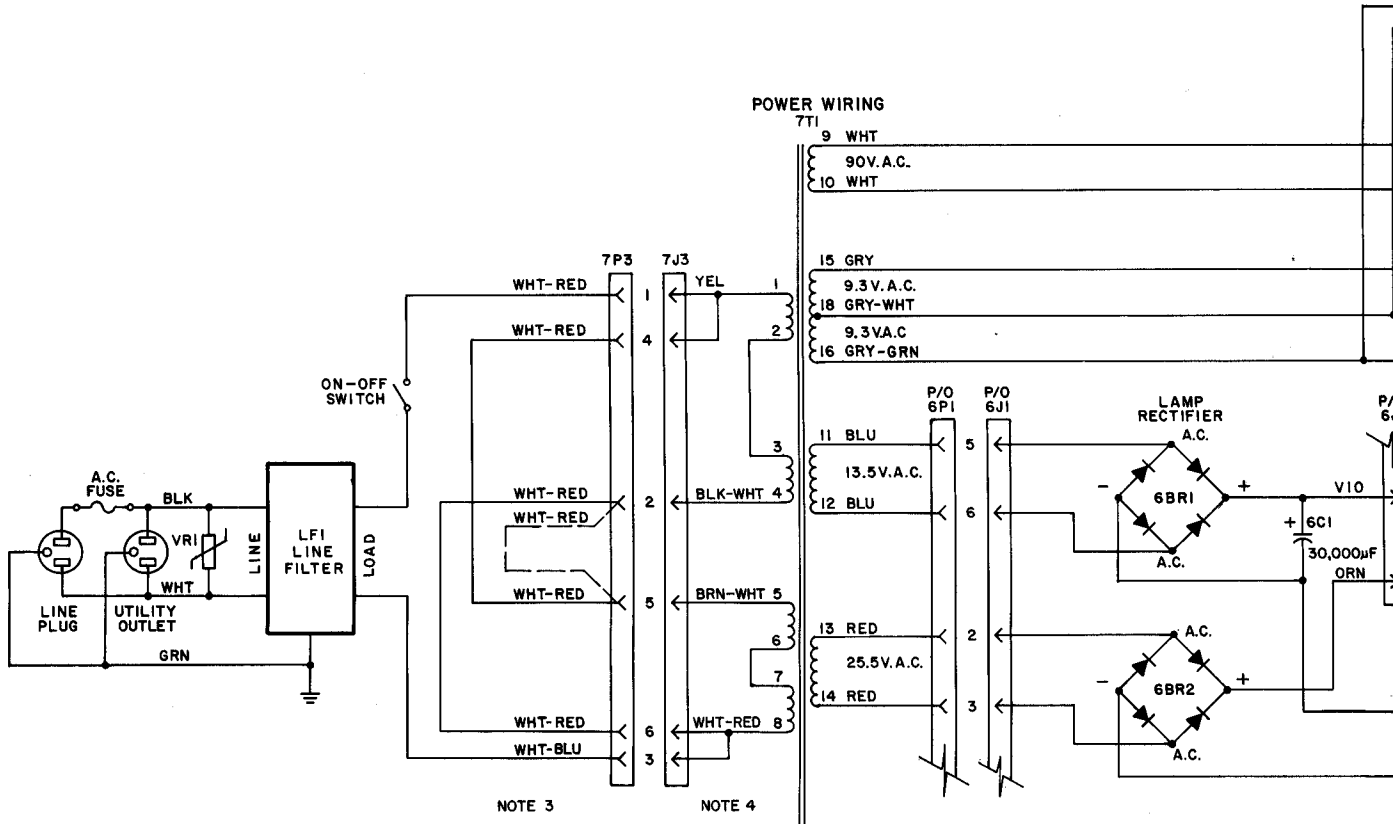

NOTES:

1. FOR 105 OR 117V.A.C., 7.5A FUSE & 130V. VARISTOR #5A-9044 ARE USED.
2. FOR 210 OR 235V.A.C., 4A FUSE & 275V. VARISTOR #5A-9063 ARE USED.
3. JUMPER WIRES ON 6P1 SHOWN WITH SOLID LINES ARE CONNECTED FOR 117V.A.C. OPERATION. ONLY THE ONE SHOWN WITH A DASHED LINE IS CONNECTED FOR 220 V.A.C. OPERATION.
4. FOR LOW-LINE CONDITIONS (105 OR 210V.A.C.) MOVE BLK-WHT WIRE FROM 6T1-4 TO 6T1-3) & MOVE 2 WHT-RED WIRES FROM 6T1-8 TO 6T1-7.

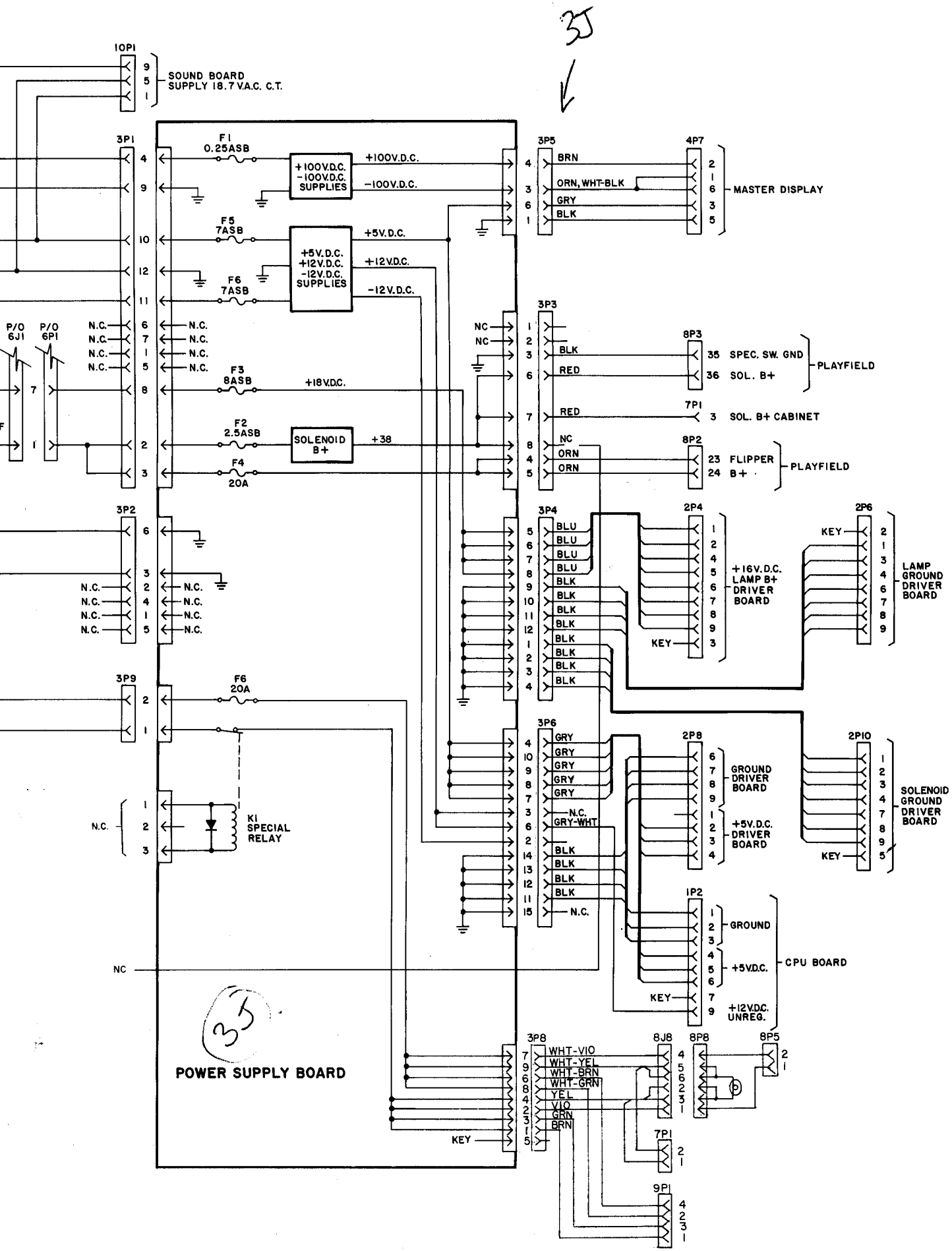

Power Wiring Diagram
15

ITEM NO.	PART NO.	PART DESIGNATION	DESCRIPT
58			6-32 x 3/8" BINDER
59			6-32 HEX NUT
60		W1, W2, W5, W7, W9, W10, W15	WIRE JUMPER 2 WIRE WITH INSU
61	5A-9248	TP1 THR TP4	TERMINAL # 15
62	5A-9363	R11	RESISTOR, FC, 5% 1/4 WATT
64	5A-9362	SR1	RESISTOR, 4.7 10 PIN SIP
65	3A-7520-1		TIE WRAP

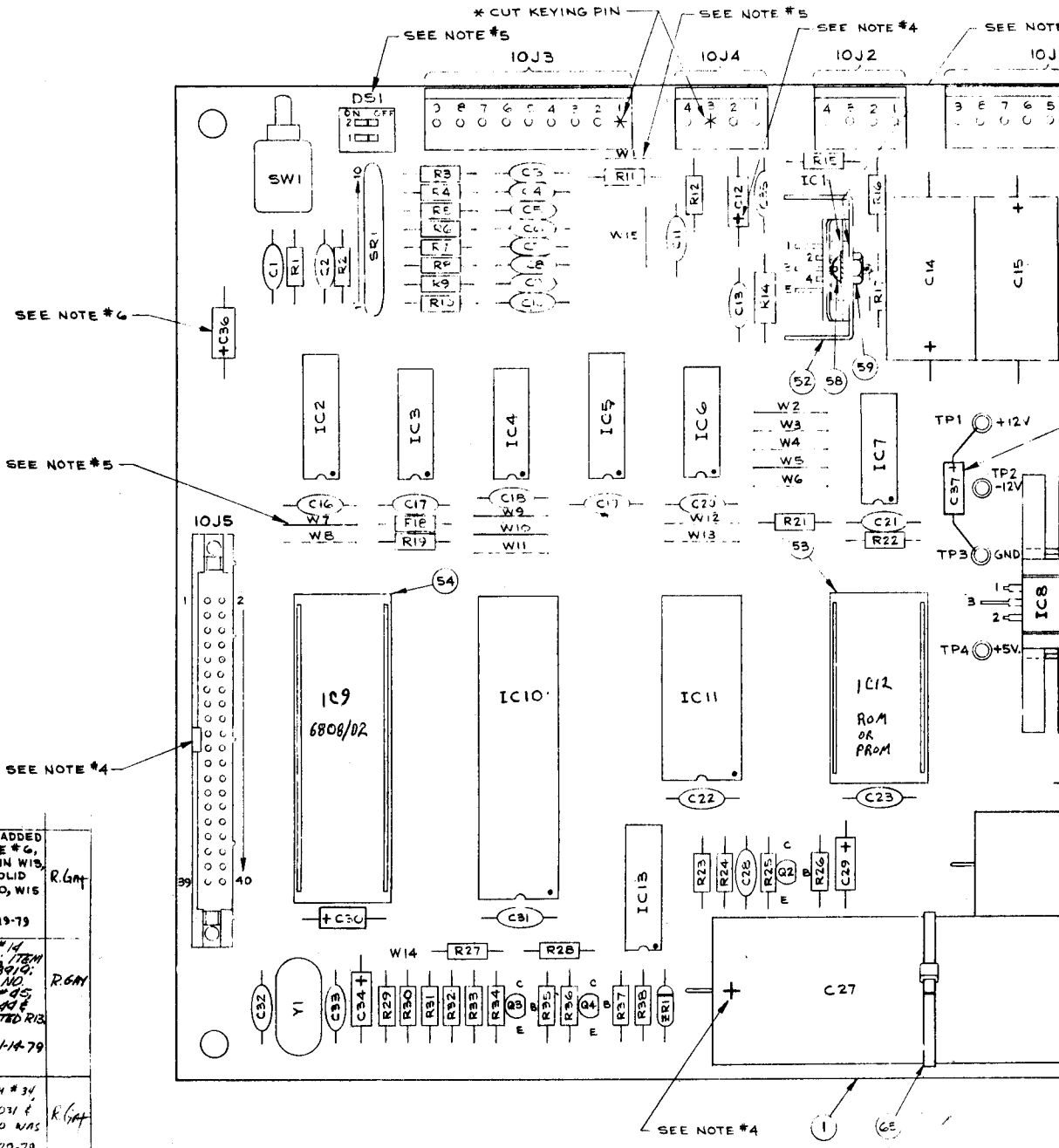

REVISION LETTER	REVISION	BY
E	REVISED NOTES, ADDED ITEM #45 & NOTE #6, RELOCATED W15, IN W13, DASH LINE WAS SOLID LINE & ITEM #60, W15 WAS W13 E.C.O. 11-19-79	R.Gay
D	DELETED ITEM #14 PT. NO. 5C-9016; ITEM #16 PT. NO. 5A-8919; ITEM #25, PT. NO. 5A-9314 ITEM #45, PT. NO. 5A-9344 & IN ITEM #21, DELETED R13 QTY. WAS 6 E.C.O. 4764 11-14-79	R.GAY
C	ADDED C36, ITEM #34, PT. NO WAS 5A-9031 & QTY. WAS 1, & C30 WAS .01 MFD. E.C.O. 4760 10-29-79	R.Gay
B	DELETED ITEM #62 ADDED R1 & R12 TO ITEM #14 QTY. WAS 7 10-6-79	R.G
A	ITEM #61, ADDED [illegible] ITEM #62, ADDED [illegible] ITEM #62 ADDED [illegible] 10-4-79	R.G

DIETZGEN NO. 198H ASEPROOF

RIPTION	REQ'D. NO.
DER HEAD SCREW	3
UT	3
R 22 GAUGE NSULATION	7
1502-1	4
TC, 5.6 K OHM TT	1
4.7 K OHM	1
	1
OTE #1	
0J1	

ITEM NO.	PART NO.	PART DESIGNATION	DESCRIPTION	REQ'D. NO.
48	5A 6814	F1, F2	4 AMP SLOW BLOW FUSE	2
49	5A-9178		FUSE HOLDER	4
50	5A-9172		HEAT SINK THERMALLOY *6072B	1
51	5A-9173		HEAT SINK THERMALLOY *6071B	1
52	5A-9199		HEAT SINK THERMALLOY *6030	1
53	5A-9004		24 PIN SOCKET	1
54	5A-8985		40 PIN SOCKET	1
55	5A-9027	10J1, 10J3	9 PIN MALE CONNECTOR	2
56	5A-9028	10J2, 10J4	4 PIN MALE CONNECTOR	2
57	5A-9349	10J5	40 PIN RIBBON HEADER	1

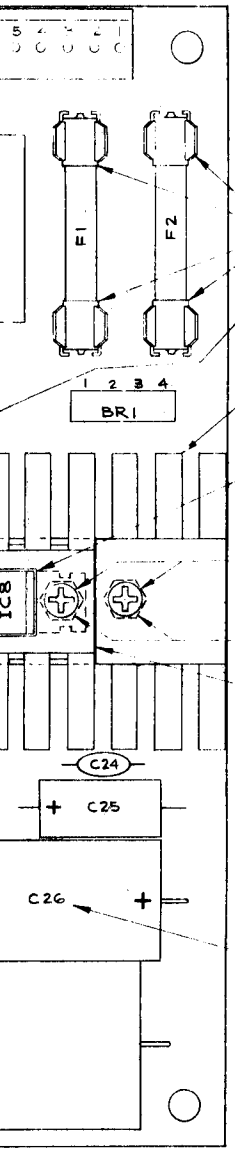

NOTES:

1. USE THERMAL COMPOUND BETWEEN IC'S AND HEAT SINK.
2. CAUTION: AVOID STATIC DISCHARGE DAMAGE TO MOS LOGIC.
3. SYMBOLS SHOWN ON COMPONENTS ARE FOR REFERENCE ONLY. DO NOT SCREEN OR STAMP.
4. OBSERVE INDEX MARK OF ALL INTEGRATED CIRCUITS, DIODES D1, D2, AND ZR1.
   CAPACITORS C12, C13, C15, C25, C26, C27.
   CONNECTORS 10J1, 10J2, 10J4, 10J3, 10J5.
   POSITION OF TRANSISTORS Q1, Q2, Q3, Q4.
5. DS1 - 1 SELECTS SOUNDS/NOTES
   2 SELECTS SPEECH/NO SPEECH (W9/W4)
   W4 - SPEECH MODULE STATUS
   IN - SPEECH MODULE NOT ATTACHED
   OUT - SPEECH MODULE ATTACHED
   W14 - MPU INTERNAL RAM ENABLE
   W7 & W8-MEMORY MAP CONTROL
   W12 & W13 - PB7 STATUS CONTROL (W13 NEVER USED)
   W4 & W9 - PB5 STATUS CONTROL
6. SOLDERED ON TOP OF BOARD
   INSTALL THESE JUMPERS FOR FOLLOWING GAMES:

W15, W8, W12, W4, W1, W3, W6, W11 FOR:

WORLD CUP
DISCO FEVER
CONTACT
POKERINO
PHOENIX
ARISTOCRAT SHUFFLE
POMPELI SHUFFLE
KING TUT SHUFFLE
TAURUS SHUFFLE
} SOUND ROM 1

W15, W8, W12, W4, W1, W2, W5, W10, FOR:

FLASH
STELLAR WARS
TRI ZONE
TIME WARP
} SOUND ROM 1 5A-9198

W7, W15, W9, W1, (SEE NOTE *5) W2, W5, W10 FOR:

GORGAR; SOUND ROM 2 - 5A-9360

IC 12 SELECTION STRAPPING:

(2K x 8)	(1K x 8)	(512 x 8)
W2	W3	W3
W9 IN	W9 IN	W6 IN
W10	W11	W11

BILL OF MATERIAL

ITEM NO.	PART NO.	PART DESIGNATION	DESCRIPTION	REQ'D. NO.
1	IC-2001-146-3		BARE P.C. BOARD	1
2	5A-9156	IC1	TDA2002 V AUDIO AMPLIFIER	1
3	5A-9012	IC2	7442 BCD-DEC DECODER	1
4	5A-9073	IC3	7400 QUAD 2 INPUT NAND	1
5	5A-8973	IC4	7408 QUAD 2 INP. AND GATE	1
6	5A-9153	IC5	4050 BUFFER	1
7	5A-9154	IC6	4068 8 INPUT NAND GATE	1
8	5A-8971	IC7	14069 HEX INVERTER	1
9	5A-9157	IC8	7805 5 VOLT REG. W/TO220 CASE	1
10	5A-8972	IC10	6821 P.I.A.	1
11	5A-9003	IC11	6810 RAM	1
12	5A-9152	IC13	1408 D/A CONVERTER	1
13	5C-8938	Q2, Q3, Q4	2N4401 NPN TRANSISTOR	3
14				
15	5A-9018	ZR1	IN5996 6.8V. ZENER DIODE	1
16				
17	5A-9158 OR 5A-9357	BR1	MDA 200/3N253 BRIDGE RECTIFIER	1
18	5A-9020	Y1	3.58 MHz CRYSTAL	1
19	5B-8991	R1, R18, R19, R21, R22, R27, R30, R31, R32	RESISTOR, FC, 4.7K OHM 5% 1/4 WATT	9
20	5B-9036	R2 THRU R10	RESISTOR, FC, 100 OHM 10% 1/4 WATT	9
21	5A-8984	R12, , R15, R28, R36, R38	RESISTOR, FC, 1K OHM 10% 1/4 WATT	5
22	5A-9181	R14	RESISTOR, FC, 1 OHM 10% 1/2 WATT	1
23	5A-9161	R16	RESISTOR, FC, 2.2 OHM 10% 1/4 WATT	1
24	5A-9361	R17	RESISTOR, FC, 220 OHM 10% 1/2 WATT	1
25				
26	5B-8988	R23, R24, R26	RESISTOR, FC, 3.3K OHM 10% 1/4 WATT	3
27	5A-9179	R25	RESISTOR, FC, 3.3 M OHM 10% 1/4 WATT	1
28	5A-9359	R29	RESISTOR, FC, 47 K OHM 5% 1/4 WATT	1
29	5B-8817	R33, R35, R37	RESISTOR, FC, 10 K OHM 10% 1/4 WATT	3
30	5B-9039	R34	RESISTOR, FC, 10 OHM 10% 1/4 WATT	1
31	5A-8980	C1, C16 THRU C28 C31	CAPACITOR, CERAMIC, .01 MFD. 50 V. ±20%	11
32	5A-9065	C2 THRU C10	CAPACITOR, CERAMIC, 470 PFD. 50 V. ±20%	9
33	5A-9345	C11	CAPACITOR, CERAMIC, .001 MFD. 20% 100 V.	1
34	5A-9365	C12, C30, C36	CAPACITOR, ELECTROLYTIC 1 MFD. 63 V. -10/+ 50%	3
35	5A-8996	C13, C24, C35	CAPACITOR, CERAMIC, .1 MFD. 50 V. ±20%	3
36	5A-9165 5A-9165-1	C14	CAPACITOR, ELECTROLYTIC, 800 MFD. 16 V. OR 1,000 MFD. 15 V. ±20%	1
37	5A-9164 5A-9164-1	C15	CAPACITOR, ELECTROLYTIC, 500 MFD. 15 V. OR 470 MFD. 25 V. ±20%	1
38	5A-8986	C25	CAPACITOR, ELECTROLYTIC, 100 MFD. 10 V. ±20%	1
39	5A-8893	C26,	CAPACITOR, ELECTROLYTIC, 1,000 MFD. 25 V. ±20%	1
40	5A-9046	C27	CAPACITOR, ELECTROLYTIC, 12,000 MFD. 16 V. ±20%	1
41	5A-9180	C28	CAPACITOR, CERAMIC, 47 PFD. 1K V. ±20%	1
42	5A-9343	C29	CAPACITOR, ELECTROLYTIC, 10 MFD. 25 V. LOW LEAK ±20%	1
43	5A-9169	C32, C33	CAPACITOR, CERAMIC DISC, 27 PFD. 1K V. ±10%	2
44	5A-9163	C34	CAPACITOR, TANTALUM, 2.2 MFD. 15 V. ±20%	1
45	5A-9031	C37	CAPACITOR, TANTALUM, 1 MFD. 25 V. ±20%	1
46	5A-9024	SW1	MOMENTARY SWITCH SPDT	1
47	5A-9330	DS1	2 STD. DIP SWITCH	1

TOLERANCES	QTY.	ASSEMBLE ON
UNLESS OTHERWISE SPECIFIED		
FRACTIONAL ±1/64"		
DECIMAL .XXX ±.005"		
HOLE DIA. +.005 -.000"		
ANGULAR ±1/2°		
CONCENTRICITIES T.I.R. .003"		
SCREW THREADS CLASS 2		

WILLIAMS ELECTRONICS, INC.
SUBSIDIARY OF THE SEEBURG CORP.
3401 N. CALIFORNIA CHICAGO, ILL. 60618 267-2240

NAME SOUND BOARD SUB-ASSEM

MATERIAL	HEAT TREATMENT	FINISH

DWN. RGH	DATE 9-23-79	APP'D. [illegible] 10/19/79	SCALE 2:1	D-8228

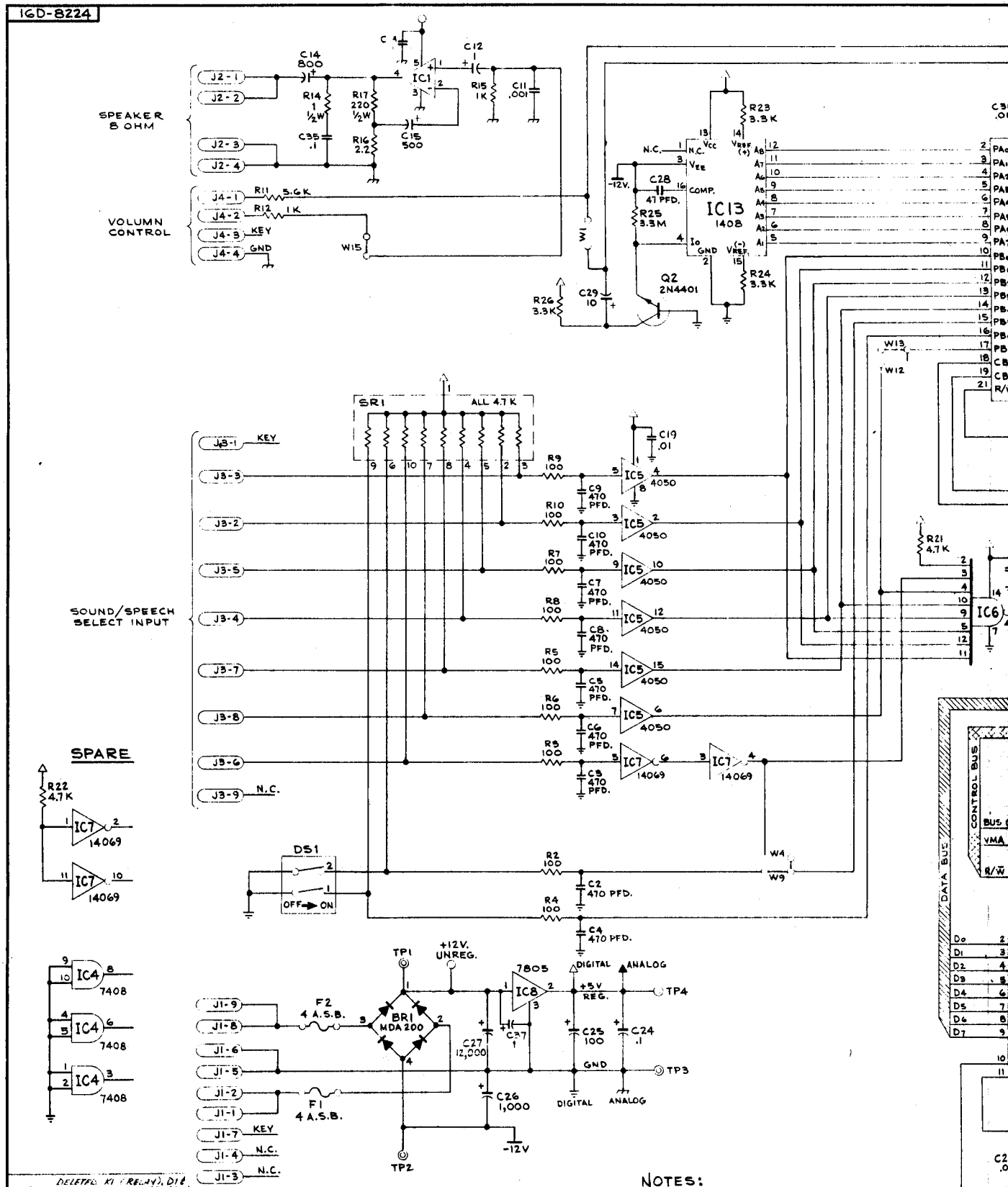

REVISION LETTER	REVISION	BY
C	DELETED K1 (RELAY), D18 D19 (1N1148), Q1 (2N4403) R13 (1K) & R28 (1.2K) ADDED W15 E.C.O 1784 11-14-79	R.G.
B	ADDED C32 & C33 WAS .01 MFD 10-23-79	R.G.
A	10/23/79 C12, C14, C15, POLARITY REVERSED	R.G.

REVISION LETTER	REVISION	BY
D	ADDED C37 & IN W13. DASH LINE WAS SOLID LINE E.C.O 11-19-79	R.G.M.

DIETZGEN NO. 198H AGEPROOF

NOTES:

1. ALL RESISTORS, ¼ WATT UNLESS OTHERWISE NOTED.
2. ALL CAPACITORS, MFD. UNLESS OTHERWISE NOTED.

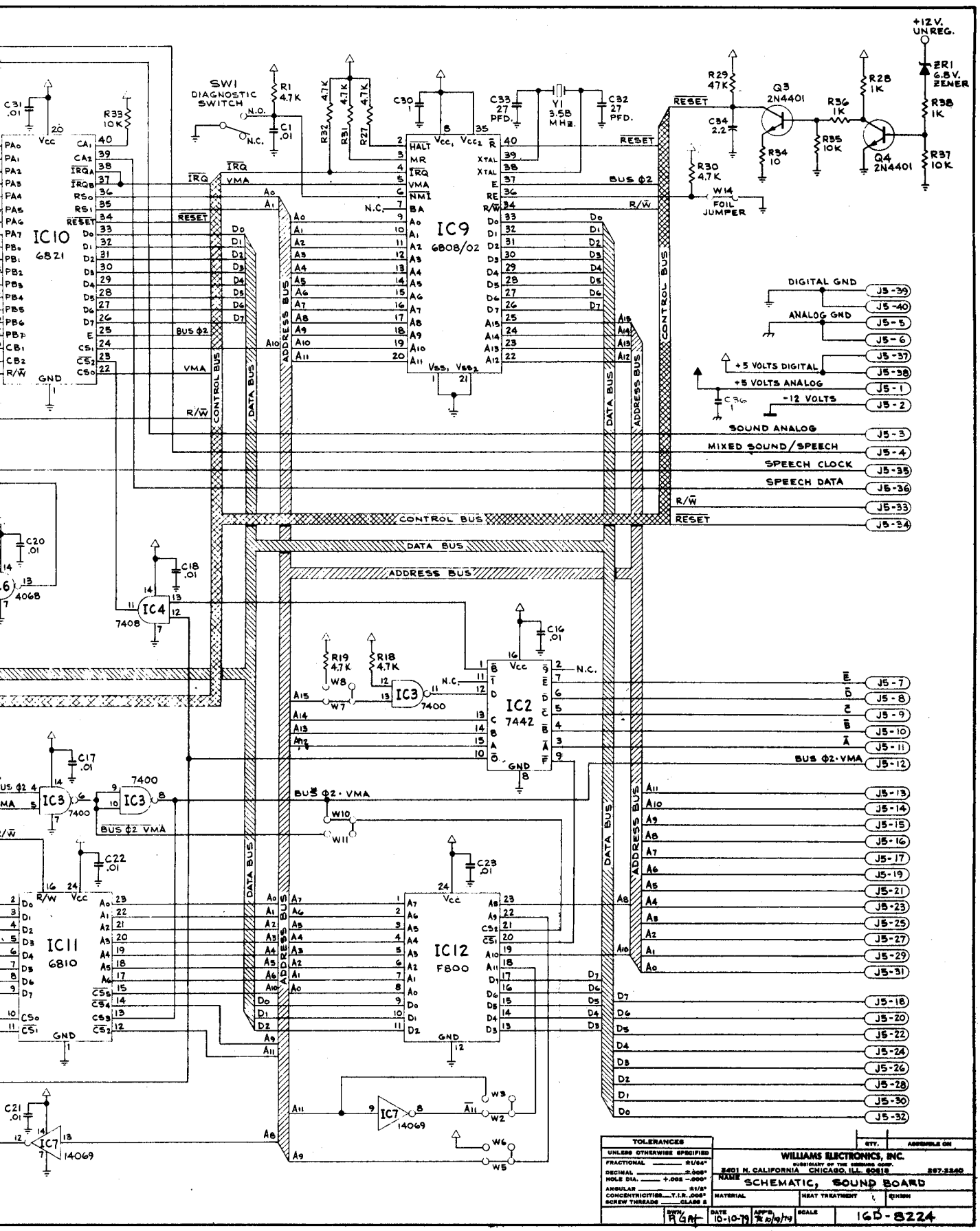

Sound Board Logic Diagram
17

C-8225

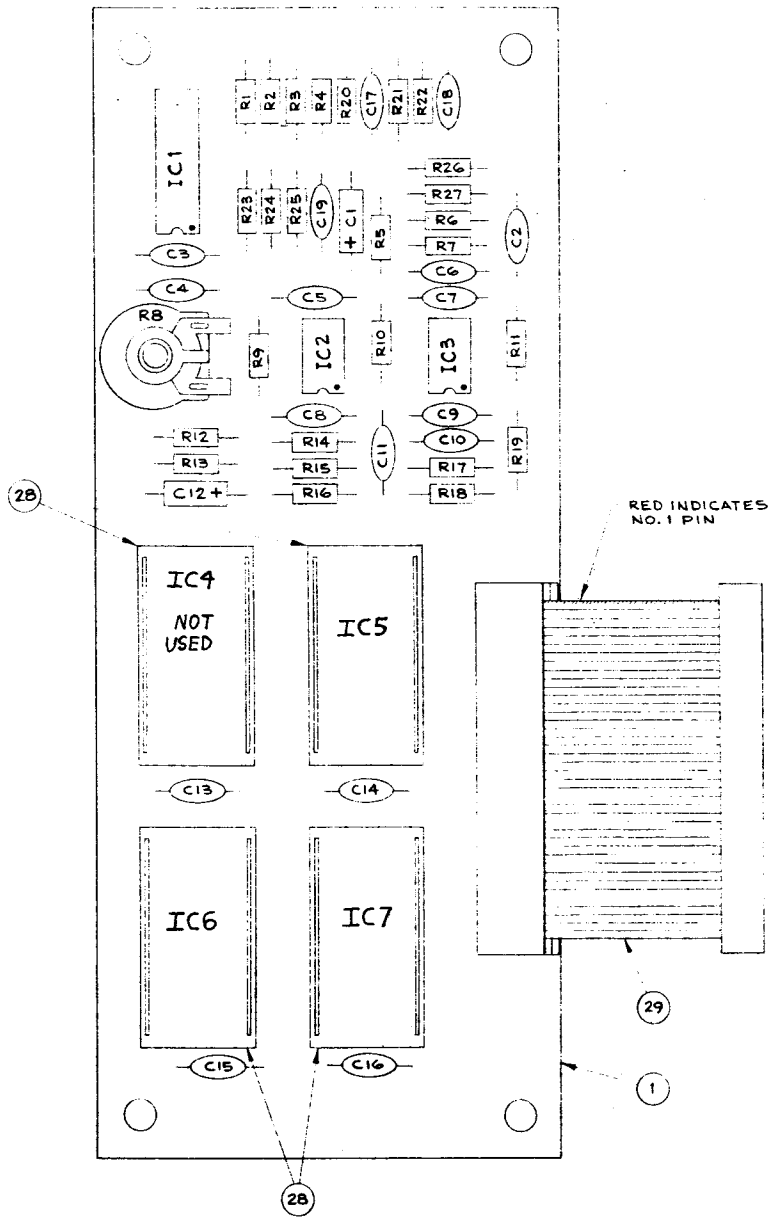

BILL OF MATERIAL

ITEM NO.	PART NO.	PART DESIGNATION	DESCRIPTION	REQ'D. NO.
1	IC-2001-148-2		BARE P.C. BOARD	1
2	5A-9334	IC1	3417 CONTINUOUSLY VARIABLE SLOPE DELTA MODULATOR	1
3	5A-9321	IC2, IC3	1458 DUAL OP-AMP.	2
4	5A-8992	R1, R4, R22, R23	RESISTOR, FC, 560 OHM 10% 1/4 WATT	4
5	5A 8776	R2	RESISTOR, FC, 68K OHM 5% 1/4 WATT	1
6	5A-8983	R3	RESISTOR, FC, 3.3 K OHM 10% 1/4 WATT	1
7	5B-8817	R5, R16	RESISTOR, FC, 10K OHM 10% 1/4 WATT	2
8	5A-8773	R6	RESISTOR, FC, 18K OHM 5% 1/4 WATT	1
9	5A-9353	R7	RESISTOR, FC, 6.2 K OHM 5% 1/4 WATT	1
10	5A-9324	R9, R10, R11, R15, R18, R19	RESISTOR, FC, 27 K OHM 10% 1/4 WATT	6
11	5B-8997	R12, R13	RESISTOR, FC, 2.7 K OHM 10% 1/4 WATT	2
12	5A-8772	R14, R17	RESISTOR, FC, 15K OHM 5% 1/4 WATT	2
13	5A-9314	R20	RESISTOR, FC, 1.2 K OHM 10% 1/4 WATT	1
14	5A-9331	R21	RESISTOR, FC, 13K OHM 10% 1/4 WATT	1
15	5A-9185	R8	POTENTIOMETER, 5K OHM	1
16	5A-9218	R24	RESISTOR, FC, 2.2M. OHM 10% 1/4 WATT	1
17	5A-8984	R25, R27	RESISTOR, FC, 1K OHM 10% 1/4 WATT	1
18	5A-9356	R26	RESISTOR, FC, 820 OHM 5% 1/4 WATT	1
19	5A-9031	C1	CAPACITOR, TANTALUM, 1 MFD. 20% 25 VOLT	1
20	5A-8980	C2, C3, C5, C7, C8, C9, C13 THRU C16	CAPACITOR, CERAMIC, .01 MFD. +80%-20% 50 VOLT	10
21	5A-9030	C4	CAPACITOR, CERAMIC, .047 MFD. 20% 50 VOLT	1
22	5A-9347	C6	CAPACITOR, CERAMIC, 1800 PFD. 5% 50 VOLT	1
23	5A-9346	C10	CAPACITOR, CERAMIC, 1200 PFD. 5% 50 VOLT	1
24	5A-9348	C11	CAPACITOR, CERAMIC, 4700 PFD. 5% 50 VOLT	1
25	5A-9343	C12	CAPACITOR, ELECTROLYTIC, 10 MFD. 20% 25 VOLT LOW LEAK	1
26	5A-9263	C17	CAPACITOR, .33 MFD. 20% 200 VOLT	1
27	5A-8996	C18, C19	CAPACITOR, CERAMIC, .1 MFD. 20% 25 VOLT	2
28	5A-9004		24 PIN SOCKET	4
29	5A 9354	J1	RIBBON CABLE ASSEM	1

REVISION LETTER	REVISION	BY

TOLERANCES
UNLESS OTHERWISE SPECIFIED
FRACTIONAL ± 1/64"
DECIMAL .XX ± .005"
HOLE DIA .XXX +.002 -.000"
ANGULAR ± 1/2°
CONCENTRICITIES T.I.R. .003"
SCREW THREADS CLASS 2

QTY. | ASSEMBLE ON

WILLIAMS ELECTRONICS, INC.
SUBSIDIARY OF THE SEEBURG CORP. OF DELAWARE
3401 N. CALIFORNIA CHICAGO, ILL. 60618 CORNELIA 7-2240

NAME SPEECH MODULE ASSEMBLY

MATERIAL | HEAT TREATMENT | FINISH

DWN. RGA | DATE 9-28-79 | APP'D. | SCALE 2:1 | C-8226

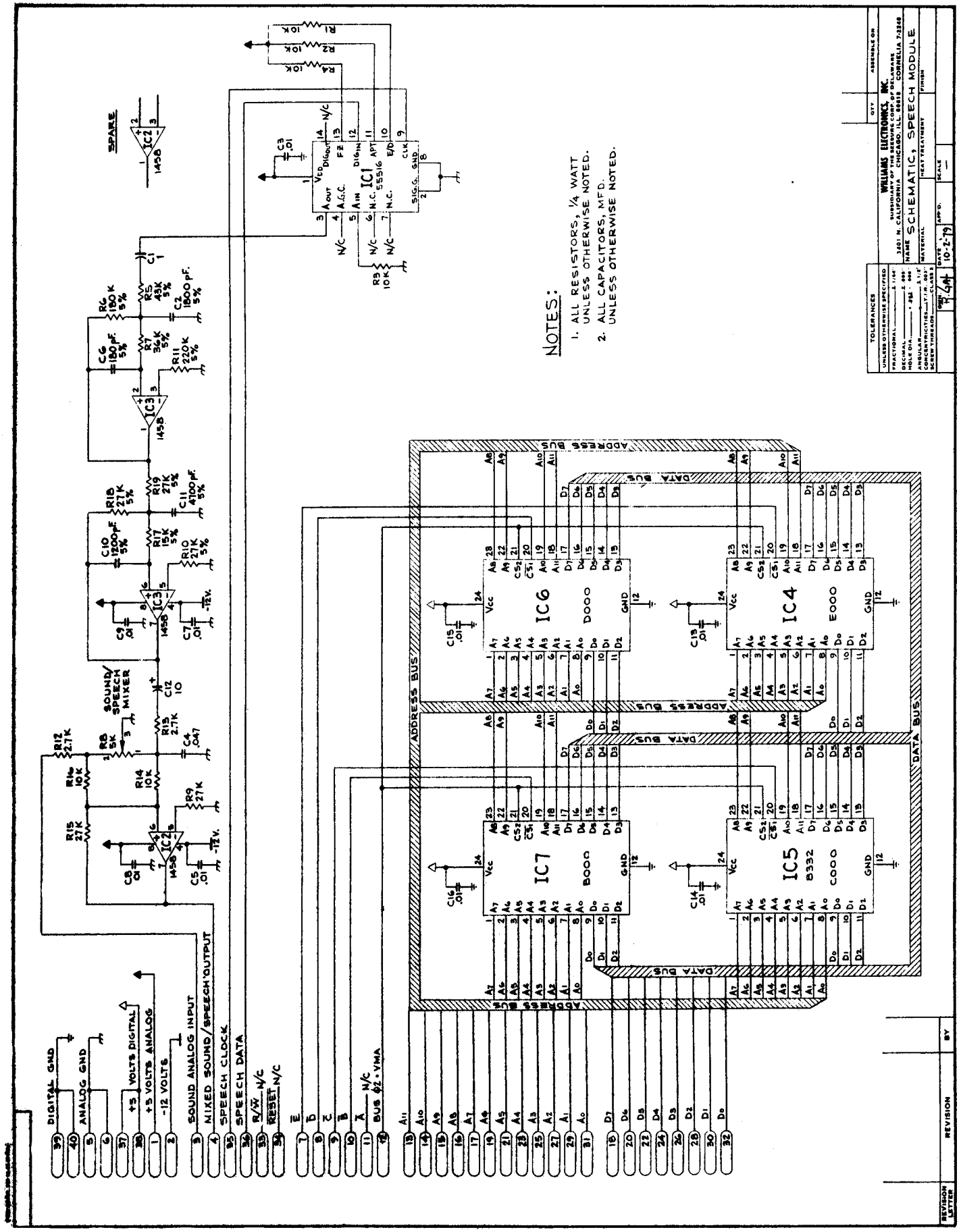

C 8228 Speech Module Assembly and Logic Diagrams

PLAYERS #1 & #3

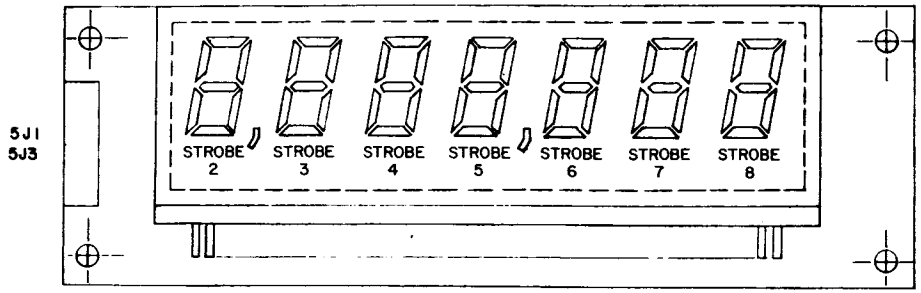

PLAYERS #2 & #4

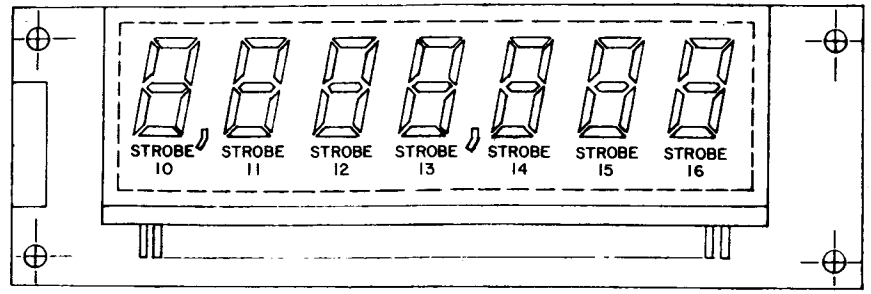

4J1/5J1 (PLAYER 1)
4J3/5J3 (PLAYER 3)

1	100,000's
2	-100V KEEP ALIVE
3	1,000,000's
4	f SEGMENT
5	N/C
6	g SEGMENT
7	+100V (N/C)
8	e SEGMENT
9	10,000's
10	d SEGMENT
11	1,000's
12	+100V KEEP ALIVE
13	100's
14	COMMA
15	10's
16	c SEGMENT
17	N/C
18	b SEGMENT
19	UNITS
20	a SEGMENT

4J2/5J2 (PLAYER 2)
4J4/5J4 (PLAYER 4)

1	100,000's
2	-100V KEEP ALIVE
3	1,000,000's
4	f' SEGMENT
5	N/C
6	g' SEGMENT
7	+100V (N/C)
8	e' SEGMENT
9	10,000's
10	d' SEGMENT
11	1,000's
12	+100V KEEP ALIVE
13	100's
14	COMMA
15	10's
16	c' SEGMENT
17	N/C
18	b' SEGMENT
19	UNITS
20	a' SEGMENT

4J8/5J5 (CREDIT/MATCH)

1	f' Segment (Credit)	
2	-100V Keep Alive	
3	e' Segment	Credit
4	g' Segment	
5	c' Segment	
6	d' Segment	
7	b' Segment	
8	10's	
9	Units	
10	a' Segment	
11	e Segment	Match
12	f Segment	
13	10's	
14	d Segment	
15	+100V Keep Alive	
16	c Segment	Match
17	g Segment	
18	b Segment	
19	Units	
20	a Segment	

DETAIL A
4J1 – 4J4, 4J8
5J1 – 5J5
CONNECTORS

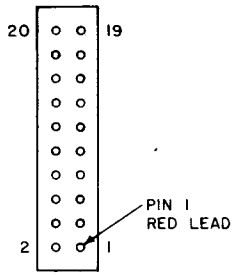

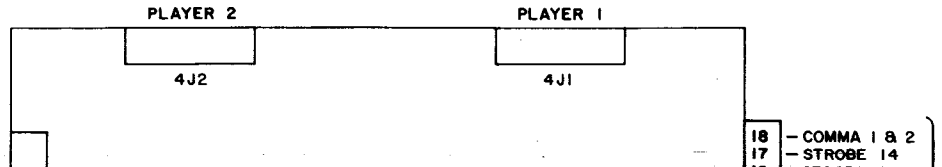

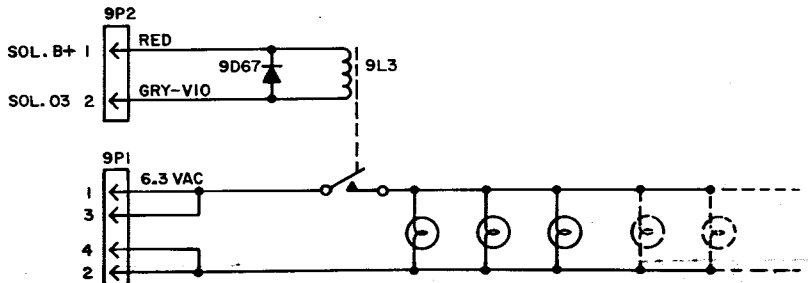

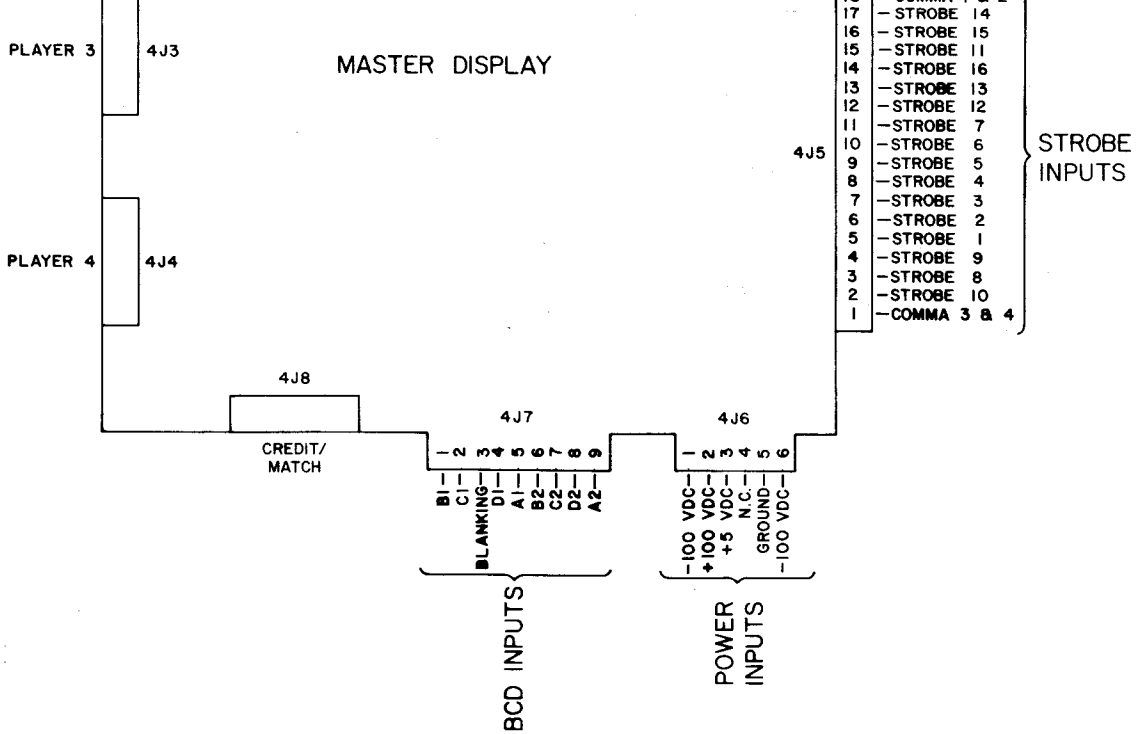

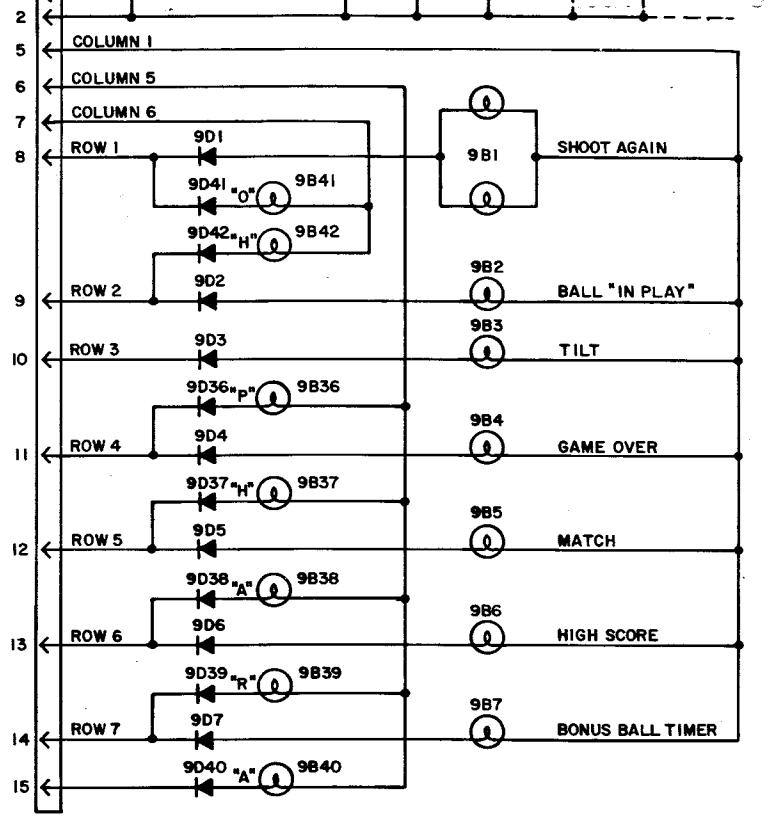

CREDITS / BALL IN PLAY

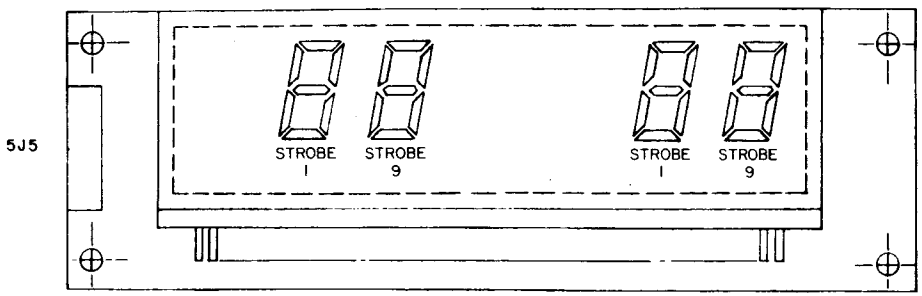

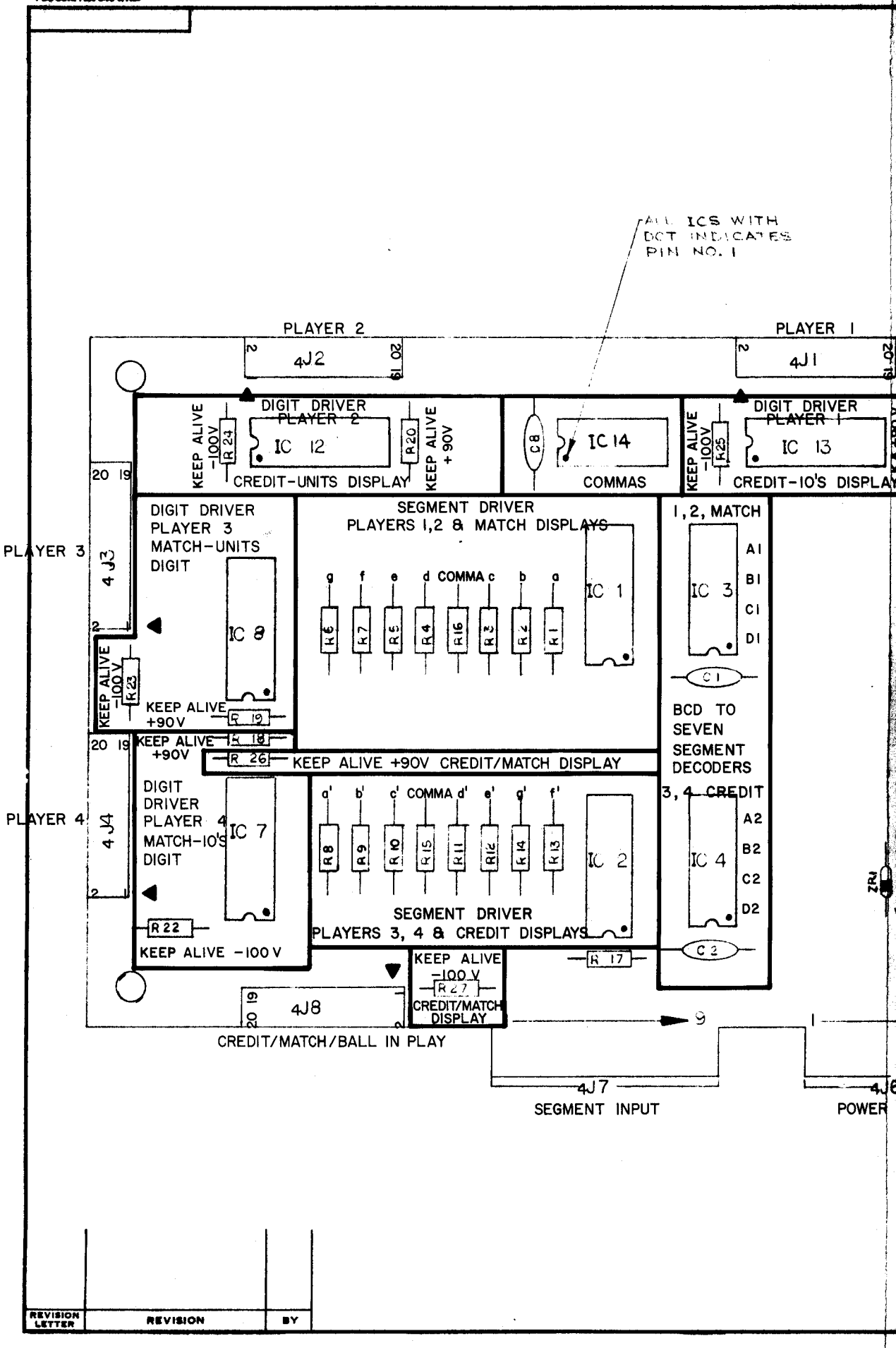
ALL ICS WITH DOT INDICATES PIN NO. 1
PLAYER 2
PLAYER 1
4J2
4J1
DIGIT DRIVER PLAYER 2
IC 12
CREDIT-UNITS DISPLAY
KEEP ALIVE -100V
R24
KEEP ALIVE +90V
R20
C8
IC 14
COMMAS
DIGIT DRIVER PLAYER 1
IC 13
CREDIT-10'S DISPLAY
R25
PLAYER 3
4J3
DIGIT DRIVER PLAYER 3 MATCH-UNITS DIGIT
IC 8
SEGMENT DRIVER PLAYERS 1,2 & MATCH DISPLAYS
IC 1
g f e d COMMA c b a
R6 R7 R5 R4 R16 R3 R2 R1
1, 2, MATCH
IC 3
A1 B1 C1 D1
C1
BCD TO SEVEN SEGMENT DECODERS
KEEP ALIVE -100V
R23
KEEP ALIVE +90V
R19
R18
R26
KEEP ALIVE +90V CREDIT/MATCH DISPLAY
PLAYER 4
4J4
DIGIT DRIVER PLAYER 4 MATCH-10'S DIGIT
IC 7
R22
KEEP ALIVE -100V
SEGMENT DRIVER PLAYERS 3, 4 & CREDIT DISPLAYS
IC 2
a' b' c' COMMA d' e' g' f'
R8 R9 R10 R15 R11 R12 R14 R13
3, 4 CREDIT
IC 4
A2 B2 C2 D2
C2
R17
KEEP ALIVE -100V
R27
CREDIT/MATCH DISPLAY
4J8
CREDIT/MATCH/BALL IN PLAY
4J7
SEGMENT INPUT
POWER
REVISION LETTER
REVISION
BY

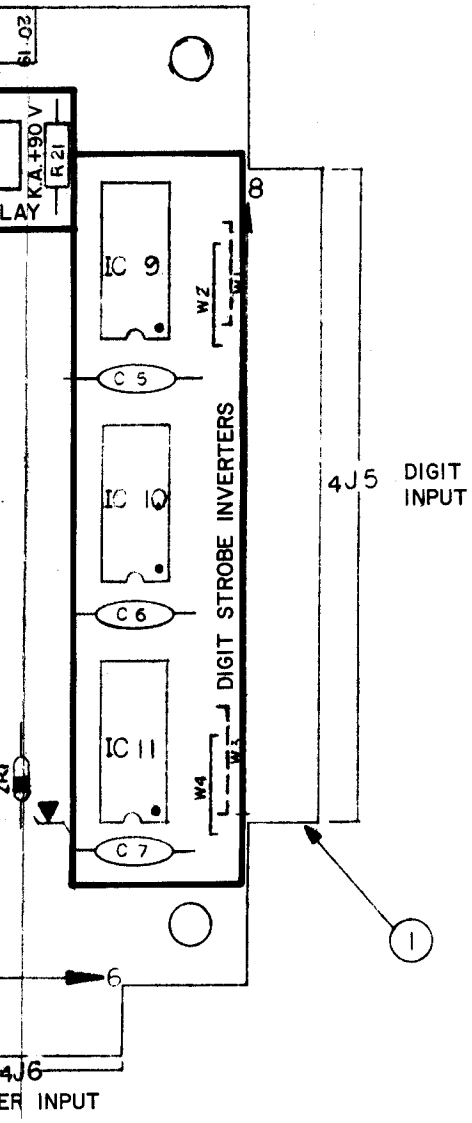

BILL OF MATERIAL

ITEM NO.	PART NO.	PART DESIGNATION	DESCRIPTION	REQ'D NO.
1	LC-2001-152-B		BARE P.C. BOARD	1
2	5A-8971	IC 9, IC 10, IC 11	MC 14069 HEX. INVERTER	3
3	5A-8970	IC3, IC4	MC 14543 BCD TO SEVEN SEGMENT LATCH/DECODER/DRIVER	2
4	5A-8969	IC 1, IC 2	UDN-7180 GAS DISCHARGE DISPLAY SEGMENT DRIVER	2
5	5A-8968	IC 7 IC 8 IC 12 IC 13	UDN-6184A OR UDN-6184A GAS DISCHARGE DISPLAY SEGMENT DR	4
6		IC 14	MC 14081 QUAD 2-INPUT AND GATE	1
7	5B-8981	R1-R14	RESISTOR, FC, 10K OHM 10% 1/2 WATT	14
8	5A-9135	ZR1	IN4740A ZENER DIODE 10V, 5% 1W	1
9	5A-8980	C1, C2 C5 THRU C8	CAPACITOR CERAMIC, .01 MFD. 50V	6
10		W2, W4	JUMPER #22 GA SOLID WIRE	2
11	5A-9086	R17	RESISTOR, FC, 6.8K OHM 10% 1/4 WATT	1
12	5B-8982	R18 THUR R27	RESISTOR, FC, 3 MEG. OHM 10% 1/4 WATT	10
13		J8, J1 THUR J4	20 PIN RIBBON HEADER	5
14		R15, R16	RESISTOR, 15K OHM, 10% 1/2 WATT	2

DIGIT CROSS REFERENCE

DIGIT	7-SEGMENT DECODER/DRIVER	STROBE (DRIVER)
Credit 10's	IC4/IC2	1 (IC13)
Credit Units	IC4/IC2	9 (IC12)
Match 10's	IC3/IC1	1 (IC7)
Match Units	IC3/IC1	9 (IC8)
#1 1,000,000	IC3/IC1	2 (IC13)
#1 100,000's	IC3/IC1	3 (IC13)
#1 10,000's	IC3/IC1	4 (IC13)
#1 1,000's	IC3/IC1	5 (IC13)
#1 100's	IC3/IC1	6 (IC13)
#1 10's	IC3/IC1	7 (IC13)
#1 Units	IC3/IC1	8 (IC13)
#2 1,000,000's	IC3/IC1	10 (IC12)
#2 100,000's	IC3/IC1	11 (IC12)
#2 10,000's	IC3/IC1	12 (IC12)
#2 1,000's	IC3/IC1	13 (IC12)
#2 100's	IC3/IC1	14 (IC12)
#2 10's	IC3/IC1	15 (IC12)
#2 Units	IC3/IC1	16 (IC12)
#3 1,000,000's	IC4/IC2	2 (IC8)
#3 100,000's	IC4/IC2	3 (IC8)
#3 10,000's	IC4/IC2	4 (IC8)
#3 1,000's	IC4/IC2	5 (IC8)
#3 100's	IC4/IC2	6 (IC8)
#3 10's	IC4/IC2	7 (IC8)
#3 Units	IC4/IC2	8 (IC8)
#4 1,000,000's	IC4/IC2	10 (IC7)
#4 100,000's	IC4/IC2	11 (IC7)
#4 10,000's	IC4/IC2	12 (IC7)
#4 1,000's	IC4/IC2	13 (IC7)
#4 100's	IC4/IC2	14 (IC7)
#4 10's	IC4/IC2	15 (IC7)
#4 Units	IC4/IC2	16 (IC7)
#1 Comma	-/IC1	2,5 (IC13)
#2 Comma	-/IC2	10,13 (IC12)
#3 Comma	-/IC1	2,5 (IC8)
#4 Comma	-/IC2	10,13 (IC7)

TOLERANCES	QTY.	ASSEMBLE ON
UNLESS OTHERWISE SPECIFIED FRACTIONAL ± 1/64" DECIMAL ± .005" HOLE DIA. +.002 -.000" ANGULAR ± 1/8° CONCENTRICITIES T.I.R. .003" SCREW THREADS CLASS 2		

WILLIAMS ELECTRONICS, INC.
SUBSIDIARY OF THE SEEBURG CORP. OF DELAWARE
3401 N. CALIFORNIA CHICAGO, ILL. 60618 CORNELIA 7-2240

NAME MASTER DISPLAY BOARD ASSEMBLY

MATERIAL	HEAT TREATMENT	FINISH

DWN.	DATE	APP'D.	SCALE
G.H.	5-23-80		2:1 50%

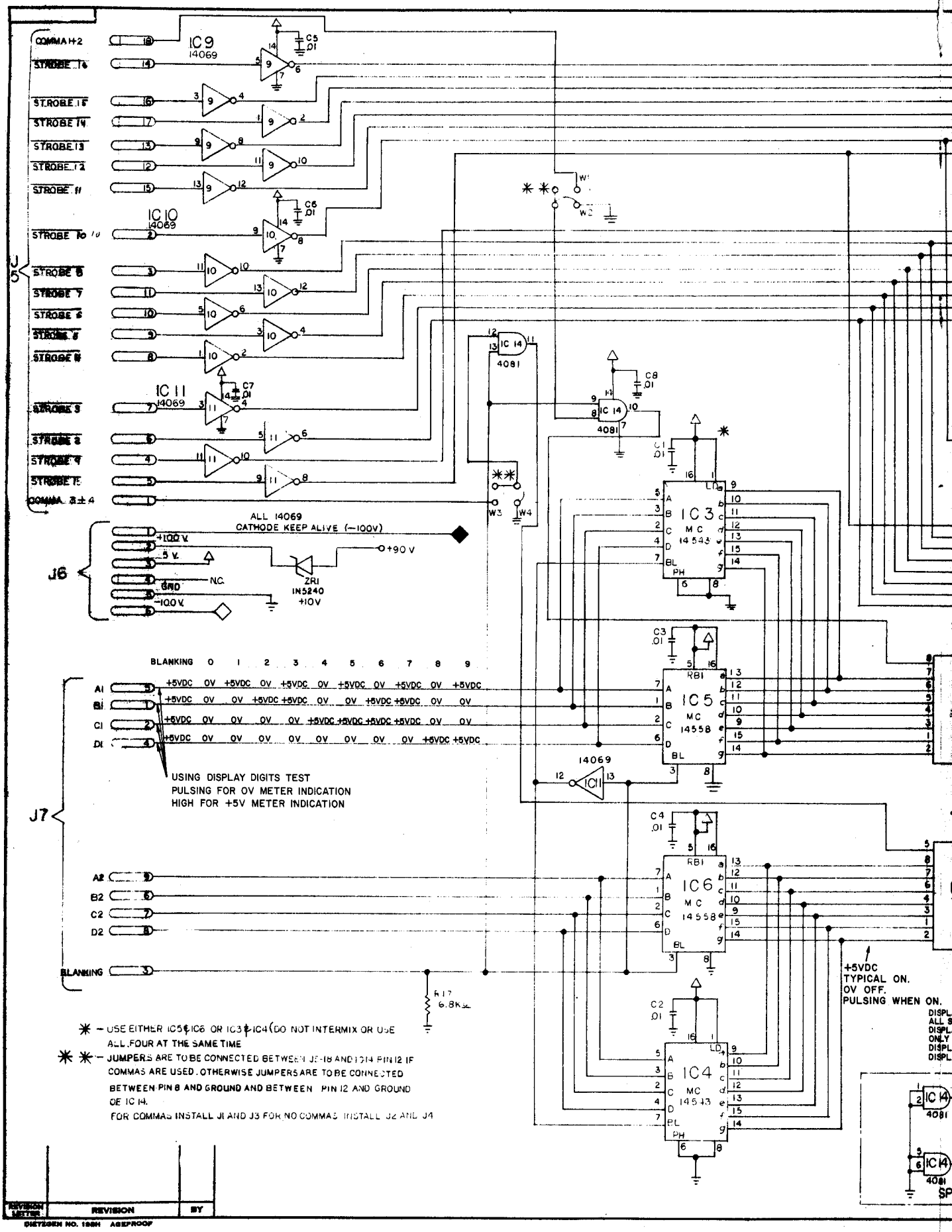

COMMA 1+2
STROBE 16
STROBE 15
STROBE 14
STROBE 13
STROBE 12
STROBE 11
STROBE 10
STROBE 9
STROBE 8
STROBE 7
STROBE 6
STROBE 5
STROBE 4
STROBE 3
STROBE 2
STROBE 1
COMMA 3±4
J5
IC9 14069
IC10 14069
IC11 14069
C5 .01
C6 .01
C7 .01
C8 .01
C1 .01
C3 .01
C4 .01
C2 .01
IC 14 4081
W1
W2
W3
W4
ALL 14069 CATHODE KEEP ALIVE (−100V)
+100 V
5 V
GND
−100 V
N.C.
+90 V
ZR1 1N5240 +10V
J6
IC3 MC 14543
IC5 MC 14558
IC6 MC 14558
IC4 MC 14543
RB1
BLANKING 0 1 2 3 4 5 6 7 8 9
A1 +5VDC 0V +5VDC 0V +5VDC 0V +5VDC 0V +5VDC 0V +5VDC
B1 +5VDC 0V 0V +5VDC +5VDC 0V 0V +5VDC +5VDC 0V 0V
C1 +5VDC 0V 0V 0V 0V +5VDC +5VDC +5VDC +5VDC 0V 0V
D1 +5VDC 0V 0V 0V 0V 0V 0V 0V 0V +5VDC +5VDC
USING DISPLAY DIGITS TEST
PULSING FOR 0V METER INDICATION
HIGH FOR +5V METER INDICATION
J7
A2
B2
C2
D2
BLANKING
R17 6.8KΩ
14069
IC11
+5VDC TYPICAL ON. 0V OFF. PULSING WHEN ON.
✱ – USE EITHER IC5 & IC6 OR IC3 & IC4 (DO NOT INTERMIX OR USE ALL FOUR AT THE SAME TIME
✱✱ – JUMPERS ARE TO BE CONNECTED BETWEEN J5-18 AND IC14 PIN 12 IF COMMAS ARE USED. OTHERWISE JUMPERS ARE TO BE CONNECTED BETWEEN PIN 8 AND GROUND AND BETWEEN PIN 12 AND GROUND OF IC 14.
FOR COMMAS INSTALL J1 AND J3 FOR NO COMMAS INSTALL J2 AND J4
REVISION LETTER
REVISION
BY
DIETZGEN NO. 198H AGEPROOF

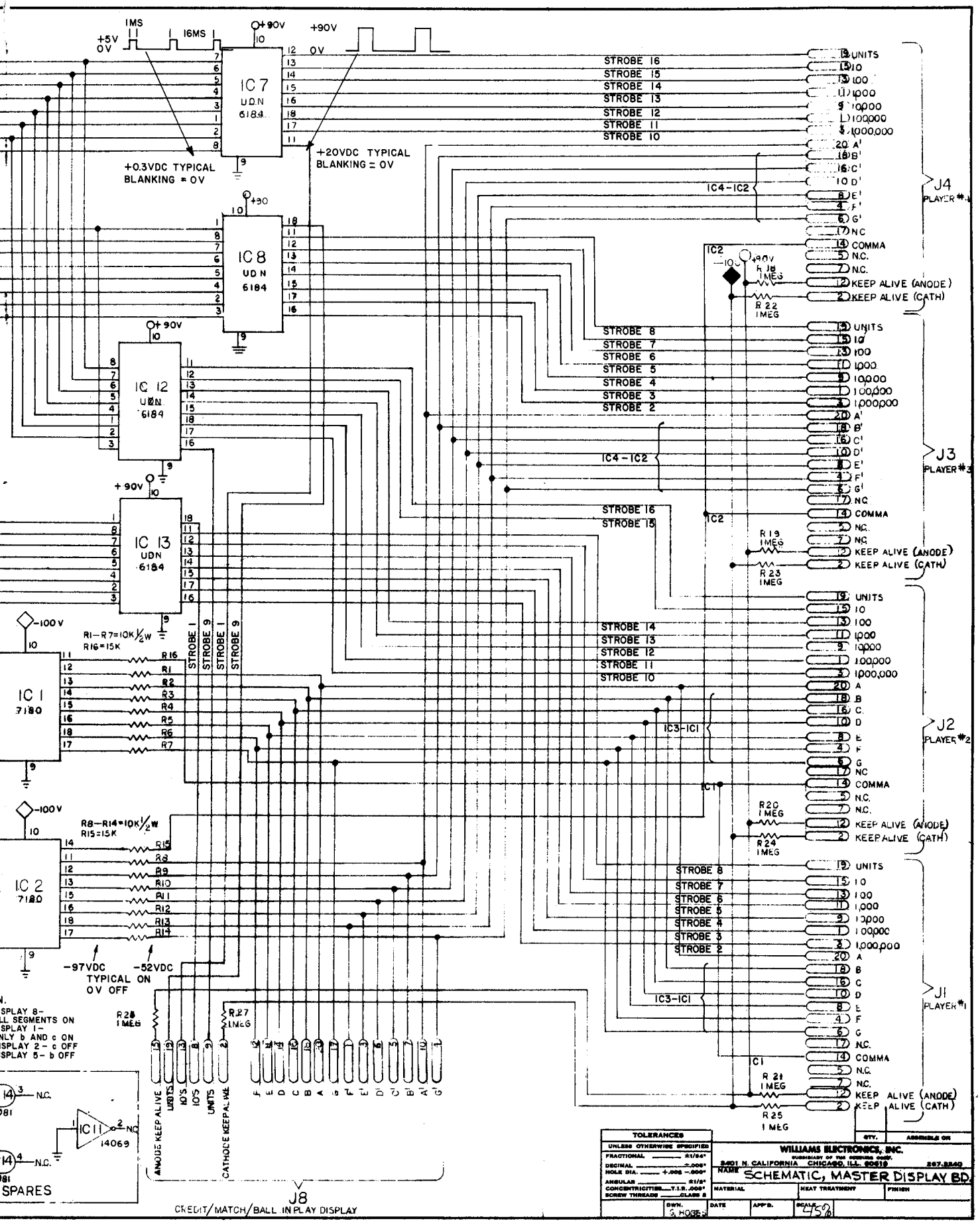

C 8363 Master Display Board Logic Diagram

BILL OF MATERIAL

ITEM	PART NO.	PART DESIGNATION	DESCRIPTION	REQ'D.
1	5162-08468-XP		SLAVE DISPLAY P.C. BOARD	1
2	33-1648		DISPLAY MTG ADHESIVE FOAM	1
3	5670-08438-XP		7 DIGIT DISPLAY	1
4	5781-08438-XP	J1	20 PIN RIBBON HEADER	1
5	03-1613-2		CAPLUG	1

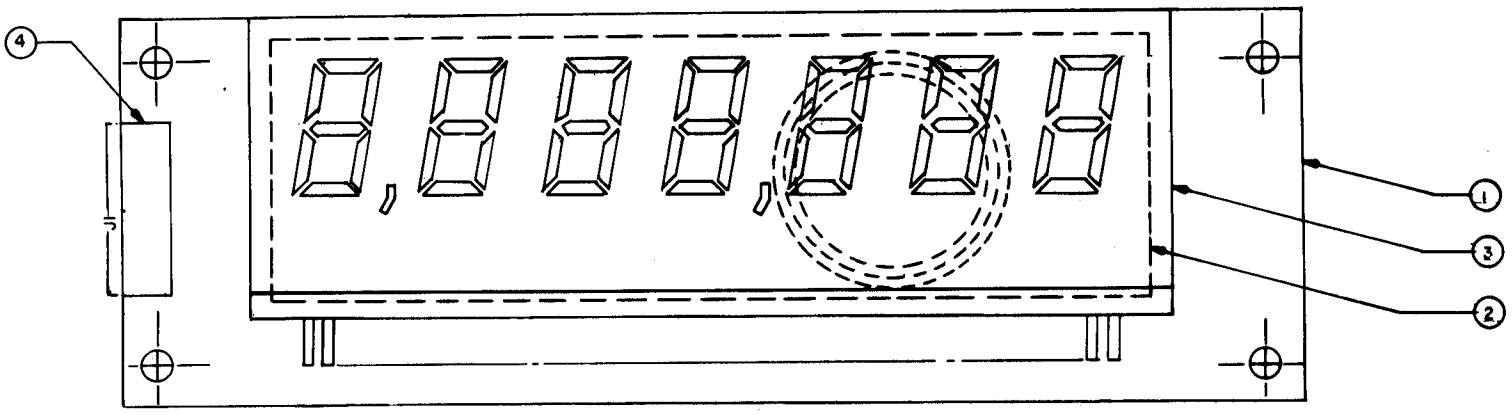

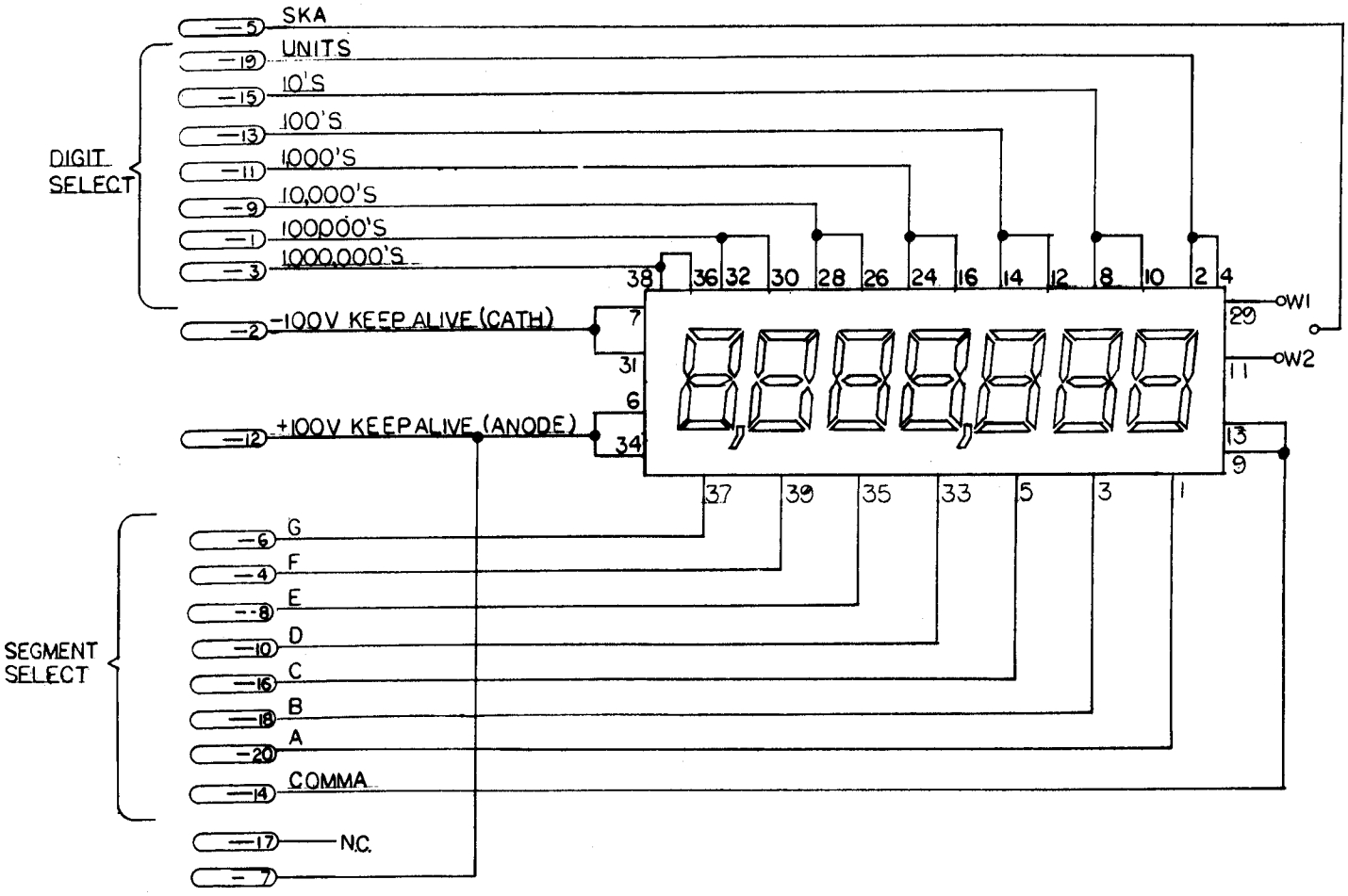

C 8364 PLAYER SLAVE DISPLAY

BILL OF MATERIAL

ITEM	PART NO.	PART DESIGNATION	DESCRIPTION	REQ'D
1	5767-09468-00		CREDIT/MATCH SLAVE P.C. BOARD	1
2	23-6845		FOAM DISPLAY - BACK	1
3	5670-09448-00		4 DIGIT DISPLAY	1
4	5791-09438-00	J1	20 PIN RIBBON HEADER	1
5	23-6546		FOAM DISPLAY - FRONT	1
6	03-7573-2		CAPLUG	1

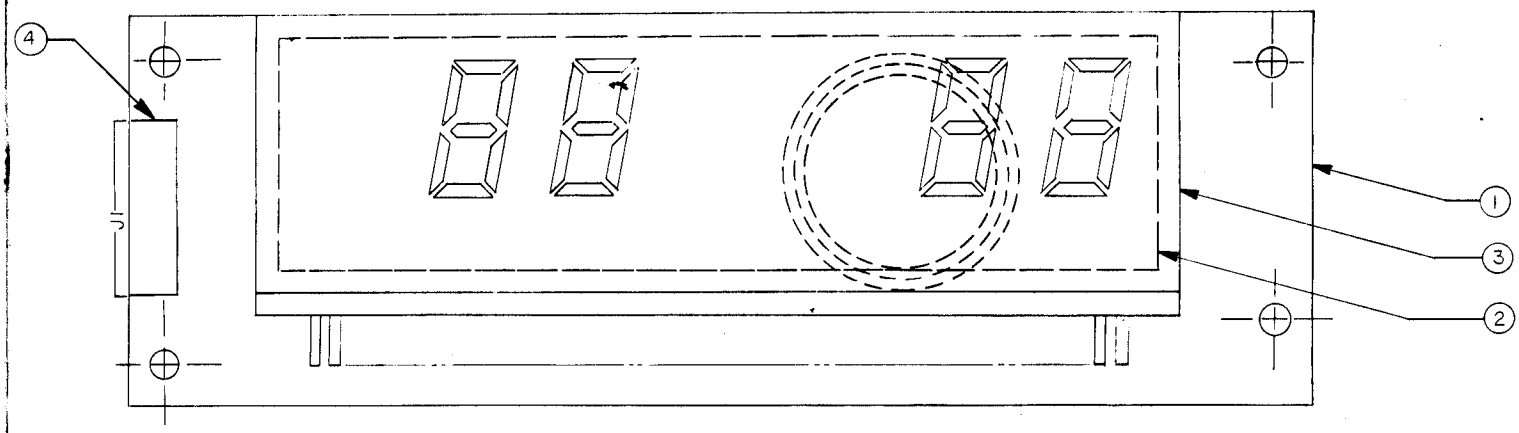

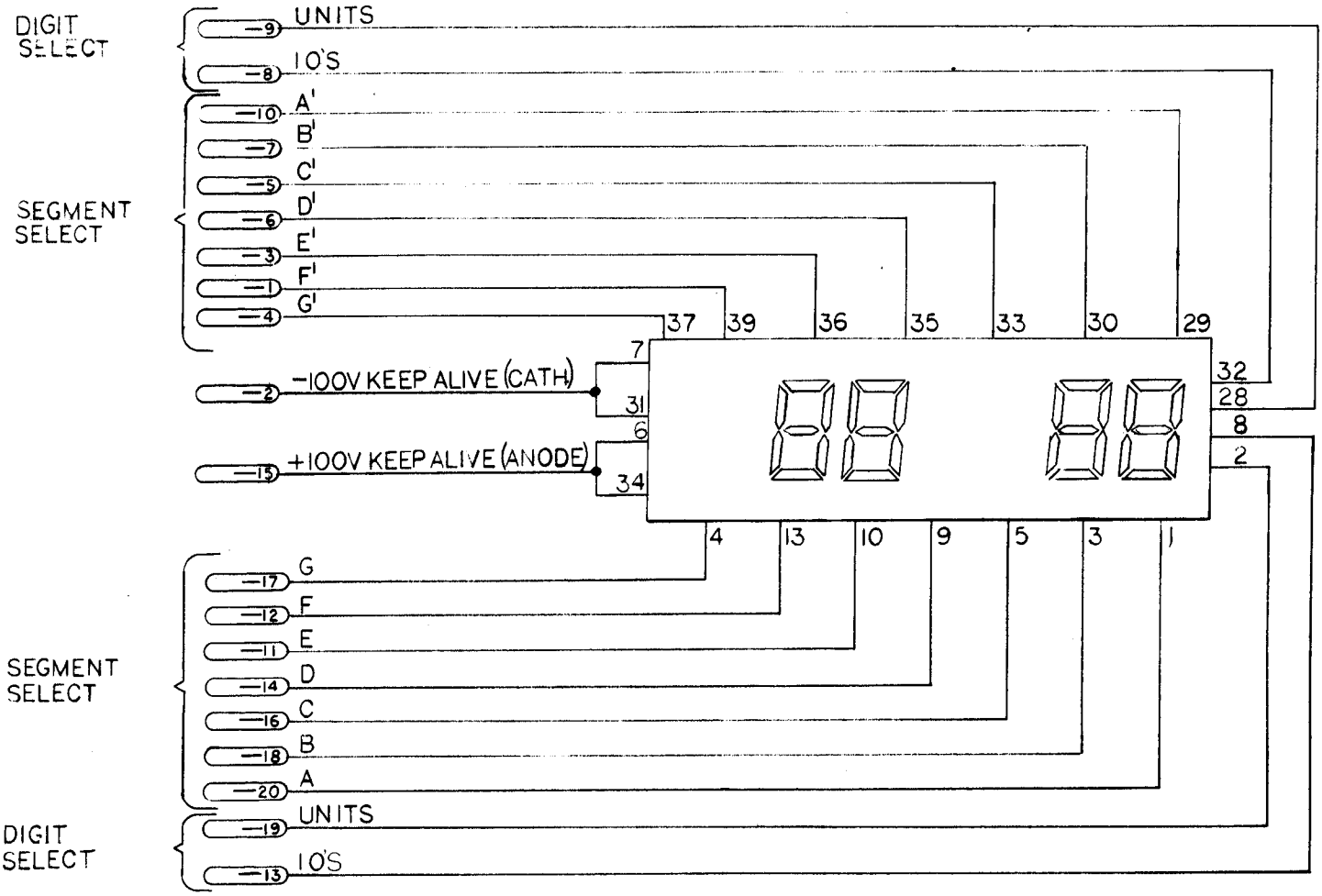

C 8365 CREDIT/MATCH SLAVE DISPLAY

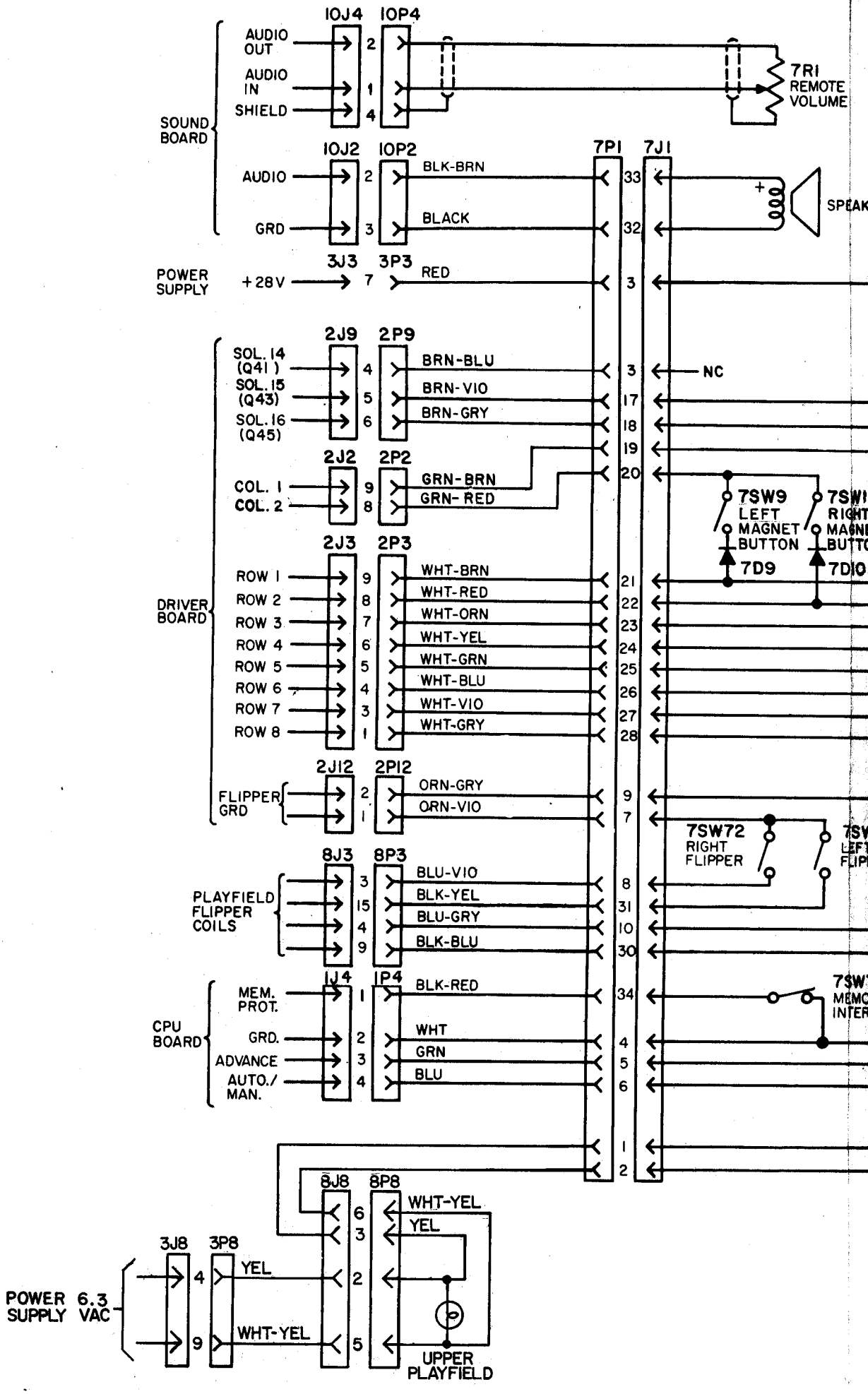
10J4
10P4
AUDIO OUT
AUDIO IN
SHIELD
SOUND BOARD
2
1
4
7R1
REMOTE VOLUME
10J2
10P2
AUDIO
GRD
BLK-BRN
BLACK
7P1
7J1
33
32
SPEAK
3J3
3P3
POWER SUPPLY
+28V
7
RED
3
2J9
2P9
SOL. 14 (Q41)
SOL. 15 (Q43)
SOL. 16 (Q45)
BRN-BLU
BRN-VIO
BRN-GRY
NC
17
18
19
2J2
2P2
COL. 1
COL. 2
GRN-BRN
GRN-RED
20
7SW9
LEFT MAGNET BUTTON
7D9
7D10
2J3
2P3
DRIVER BOARD
ROW 1
ROW 2
ROW 3
ROW 4
ROW 5
ROW 6
ROW 7
ROW 8
WHT-BRN
WHT-RED
WHT-ORN
WHT-YEL
WHT-GRN
WHT-BLU
WHT-VIO
WHT-GRY
21
22
23
24
25
26
27
28
2J12
2P12
FLIPPER GRD
ORN-GRY
ORN-VIO
9
7
7SW72
RIGHT FLIPPER
8J3
8P3
PLAYFIELD FLIPPER COILS
BLU-VIO
BLK-YEL
BLU-GRY
BLK-BLU
8
31
10
30
1J4
1P4
CPU BOARD
MEM. PROT.
GRD.
ADVANCE
AUTO./ MAN.
BLK-RED
WHT
GRN
BLU
34
4
5
6
1
2
8J8
8P8
WHT-YEL
YEL
6
3
2
5
3J8
3P8
POWER 6.3 SUPPLY VAC
4
9
YEL
WHT-YEL
UPPER PLAYFIELD

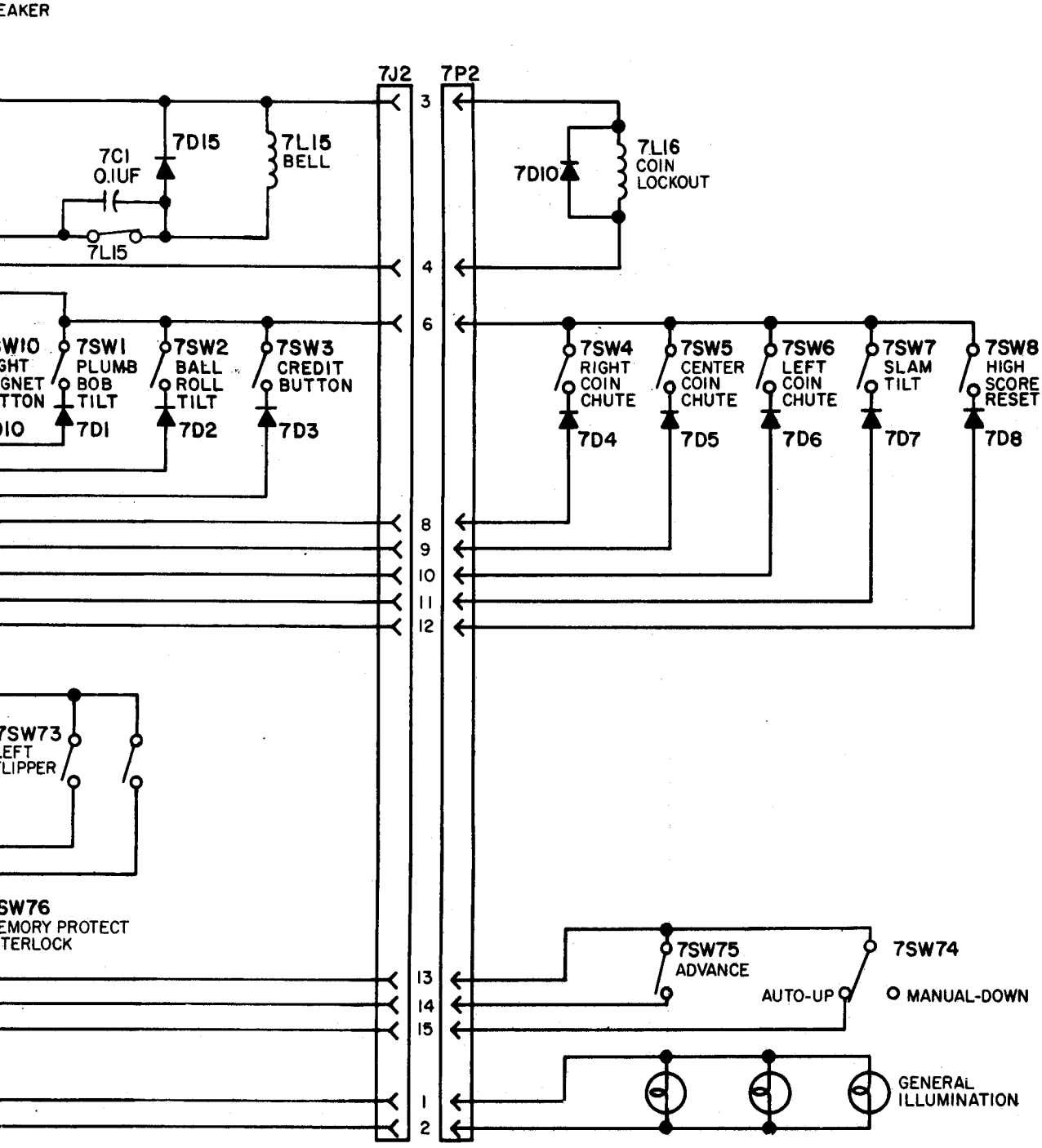
EAKER
7J2
7P2
3
4
6
8
9
10
11
12
13
14
15
1
2
7C1
0.1UF
7D15
7L15
BELL
7L15
7D10
7L16
COIN
LOCKOUT
WI0
GHT
GNET
TTON
DIO
7SW1
PLUMB
BOB
TILT
7D1
7SW2
BALL
ROLL
TILT
7D2
7SW3
CREDIT
BUTTON
7D3
7SW4
RIGHT
COIN
CHUTE
7D4
7SW5
CENTER
COIN
CHUTE
7D5
7SW6
LEFT
COIN
CHUTE
7D6
7SW7
SLAM
TILT
7D7
7SW8
HIGH
SCORE
RESET
7D8
7SW73
EFT
LIPPER
SW76
EMORY PROTECT
TERLOCK
7SW75
ADVANCE
7SW74
AUTO-UP
MANUAL-DOWN
GENERAL
ILLUMINATION

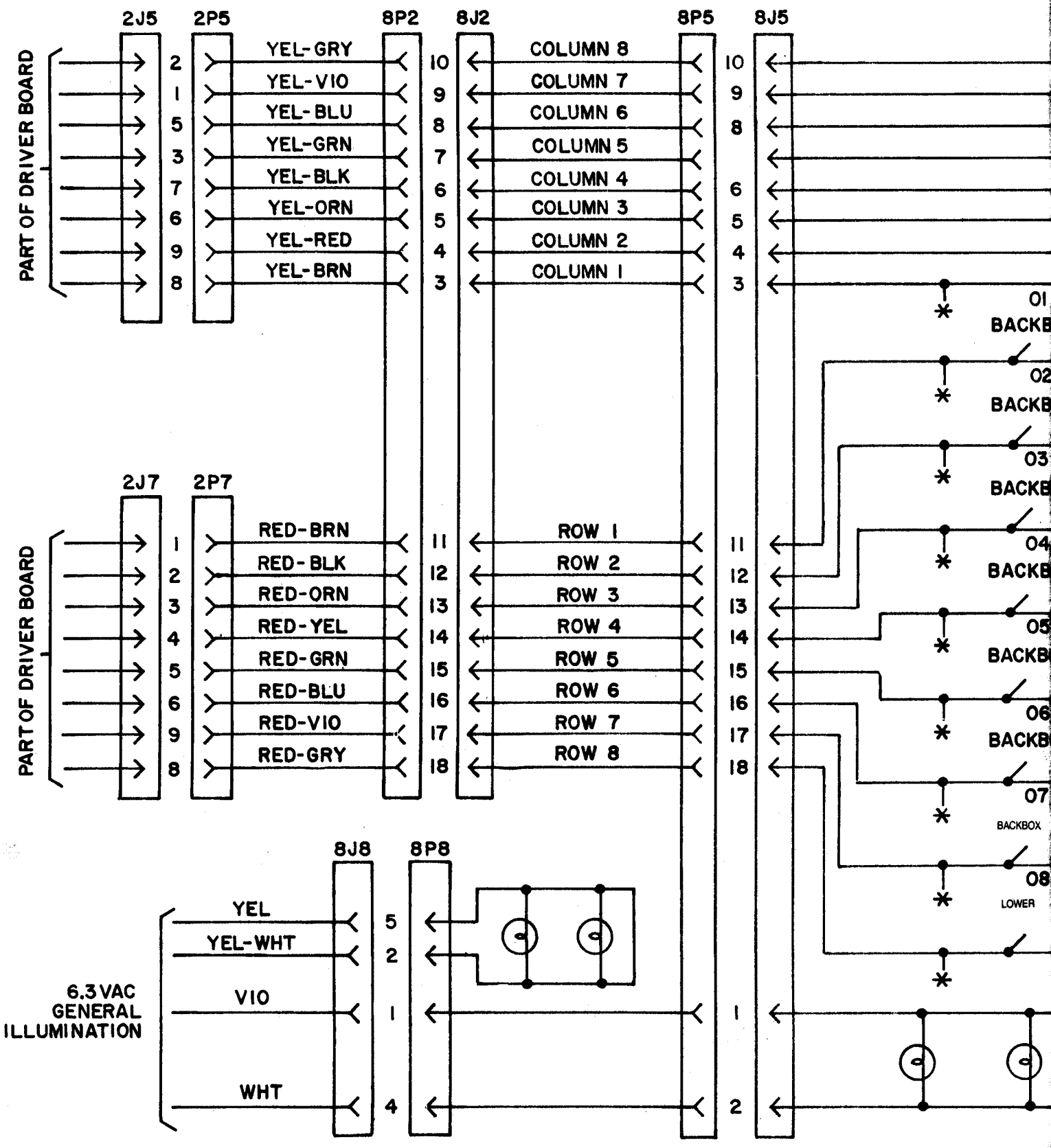
2J5
2P5
8P2
8J2
8P5
8J5
PART OF DRIVER BOARD
YEL-GRY
YEL-VIO
YEL-BLU
YEL-GRN
YEL-BLK
YEL-ORN
YEL-RED
YEL-BRN
COLUMN 8
COLUMN 7
COLUMN 6
COLUMN 5
COLUMN 4
COLUMN 3
COLUMN 2
COLUMN 1
2J7
2P7
PART OF DRIVER BOARD
RED-BRN
RED-BLK
RED-ORN
RED-YEL
RED-GRN
RED-BLU
RED-VIO
RED-GRY
ROW 1
ROW 2
ROW 3
ROW 4
ROW 5
ROW 6
ROW 7
ROW 8
8J8
8P8
6.3 VAC
GENERAL
ILLUMINATION
YEL
YEL-WHT
VIO
WHT
BACKBOX
LOWER

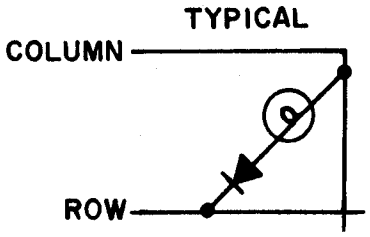

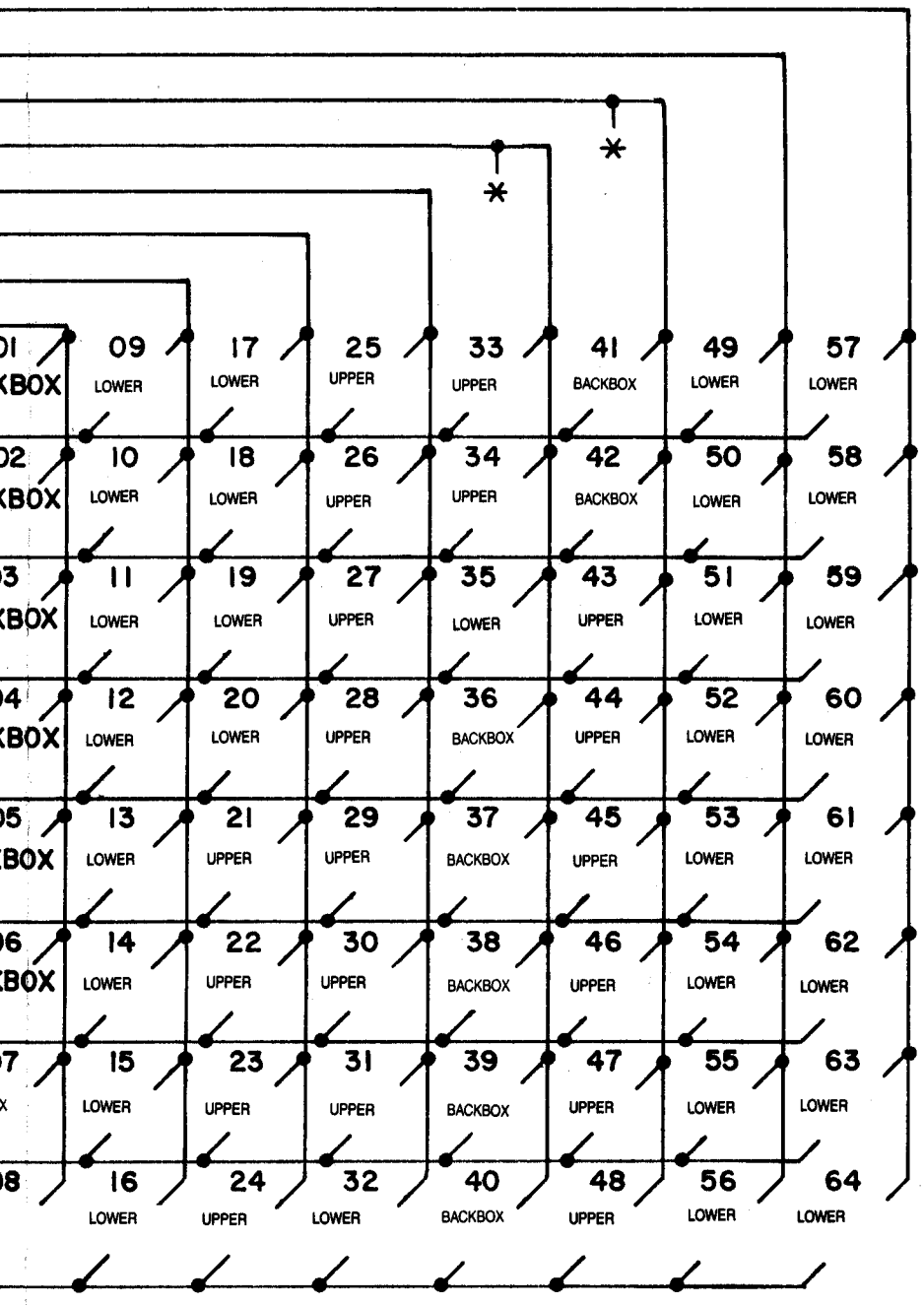

GENERAL ILLUMINATION

* SEE INSERT BOARD WIRING DIAGRAM FOR CONNECTIONS FOR BACKBOX LAMPS.

ONLY CONNECTIONS TO LAMPS IN LOWER PLAYFIELD ARE ROUTED THRU 8P5/8J5.

Bulb No.	Function
01	Same Player Shoots Again (Backbox)
02	Left Magnet, Bottom Arrow
03	2X Scoring
04	"A"
05	Slaves Tomb Extra Ball When Lit
06	"O"
07	"1" Bonus
08	"9" Bonus
09	Ball in Play
10	Left Magnet, 2+ Arrow
11	Hidden Tomb Collect Bonus
12	"O"
13	Upper Eject Hole Arrow
14	"H"
15	"2" Bonus
16	"10" Bonus
17	Tilt
18	Left Magnet 4+ Arrow
19	Lower Center 3-Bank
20	"H"
21	Lower Eject Hole Arrow
22	Extra Ball When Lit Hidden Tomb
23	"3" Bonus
24	"20" Bonus
25	Game Over
26	Right Magnet Bottom Arrow
27	Lower Right 3-Bank
28	Upper Bull's-Eye Target
29	"P" (Backbox)
30	Slaves Tomb General Illumination
31	"4" Bonus
32	"30" Bonus
33	Match
34	Right Magnet 2+ Arrow
35	"P" (Playfield)
36	Upper Left 3-Bank Bottom Arrow
37	"H"
38	Captive Ball General Illumination
39	"5" Bonus
40	"40" Bonus
41	High Score to Date
42	Right Magnet 4+ Arrow
43	"H"
44	Upper Left 3-Bank Center Arrow
45	"A"
46	Upper Center 3-Bank Left Arrow
47	"6" Bonus
48	2X
49	Bonus Ball Timer
50	Left ? Lane
51	"A"
52	Upper Left 3-Bank Top Arrow
53	"R"
54	Upper Center 3-Bank Center Arrow
55	"7" Bonus
56	3X
57	Same Player Shoots Again (Playfield)
58	Right ? Lane
59	"R"
60	Lower Bull's-Eye Target
61	"A"
62	Upper Center 3-Bank Right Arrow
63	"8" Bonus
64	5X

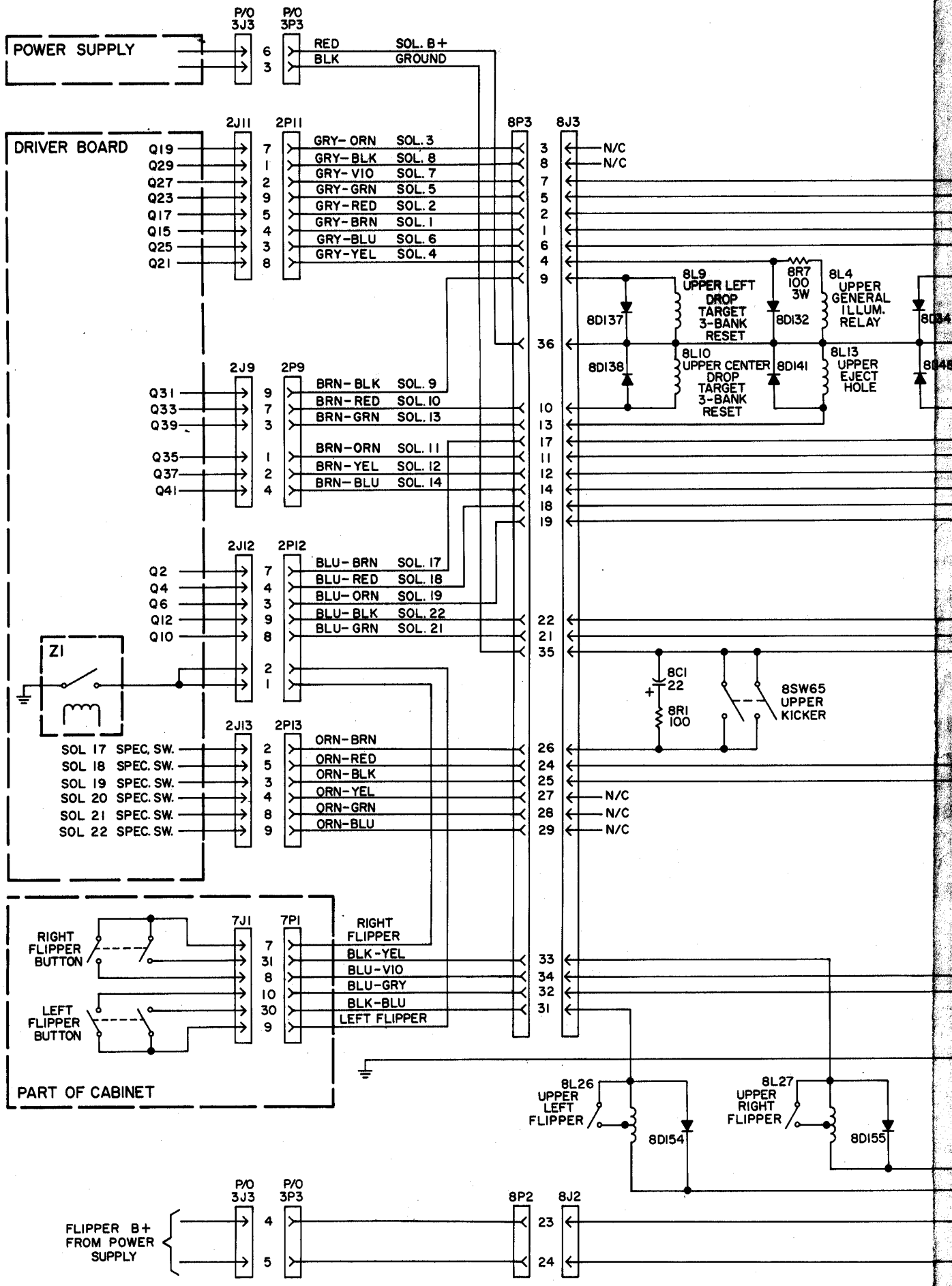
POWER SUPPLY
P/O 3J3
P/O 3P3
RED SOL. B+
BLK GROUND
DRIVER BOARD
2J11
2P11
8P3
8J3
Q19 GRY-ORN SOL. 3
Q29 GRY-BLK SOL. 8
Q27 GRY-VIO SOL. 7
Q23 GRY-GRN SOL. 5
Q17 GRY-RED SOL. 2
Q15 GRY-BRN SOL. 1
Q25 GRY-BLU SOL. 6
Q21 GRY-YEL SOL. 4
N/C
N/C
8L9 UPPER LEFT DROP TARGET 3-BANK RESET
8R7 100 3W
8L4 UPPER GENERAL ILLUM. RELAY
8D137
8D132
8D138
8L10 UPPER CENTER DROP TARGET 3-BANK RESET
8D141
8L13 UPPER EJECT HOLE
2J9
2P9
Q31 BRN-BLK SOL. 9
Q33 BRN-RED SOL. 10
Q39 BRN-GRN SOL. 13
Q35 BRN-ORN SOL. 11
Q37 BRN-YEL SOL. 12
Q41 BRN-BLU SOL. 14
2J12
2P12
Q2 BLU-BRN SOL. 17
Q4 BLU-RED SOL. 18
Q6 BLU-ORN SOL. 19
Q12 BLU-BLK SOL. 22
Q10 BLU-GRN SOL. 21
Z1
8C1 22
8R1 100
8SW65 UPPER KICKER
2J13
2P13
SOL 17 SPEC. SW. ORN-BRN
SOL 18 SPEC. SW. ORN-RED
SOL 19 SPEC. SW. ORN-BLK
SOL 20 SPEC. SW. ORN-YEL
SOL 21 SPEC. SW. ORN-GRN
SOL 22 SPEC. SW. ORN-BLU
N/C
N/C
N/C
7J1
7P1
RIGHT FLIPPER BUTTON
LEFT FLIPPER BUTTON
RIGHT FLIPPER
BLK-YEL
BLU-VIO
BLU-GRY
BLK-BLU
LEFT FLIPPER
PART OF CABINET
8L26 UPPER LEFT FLIPPER
8D154
8L27 UPPER RIGHT FLIPPER
8D155
P/O 3J3
P/O 3P3
8P2
8J2
FLIPPER B+ FROM POWER SUPPLY

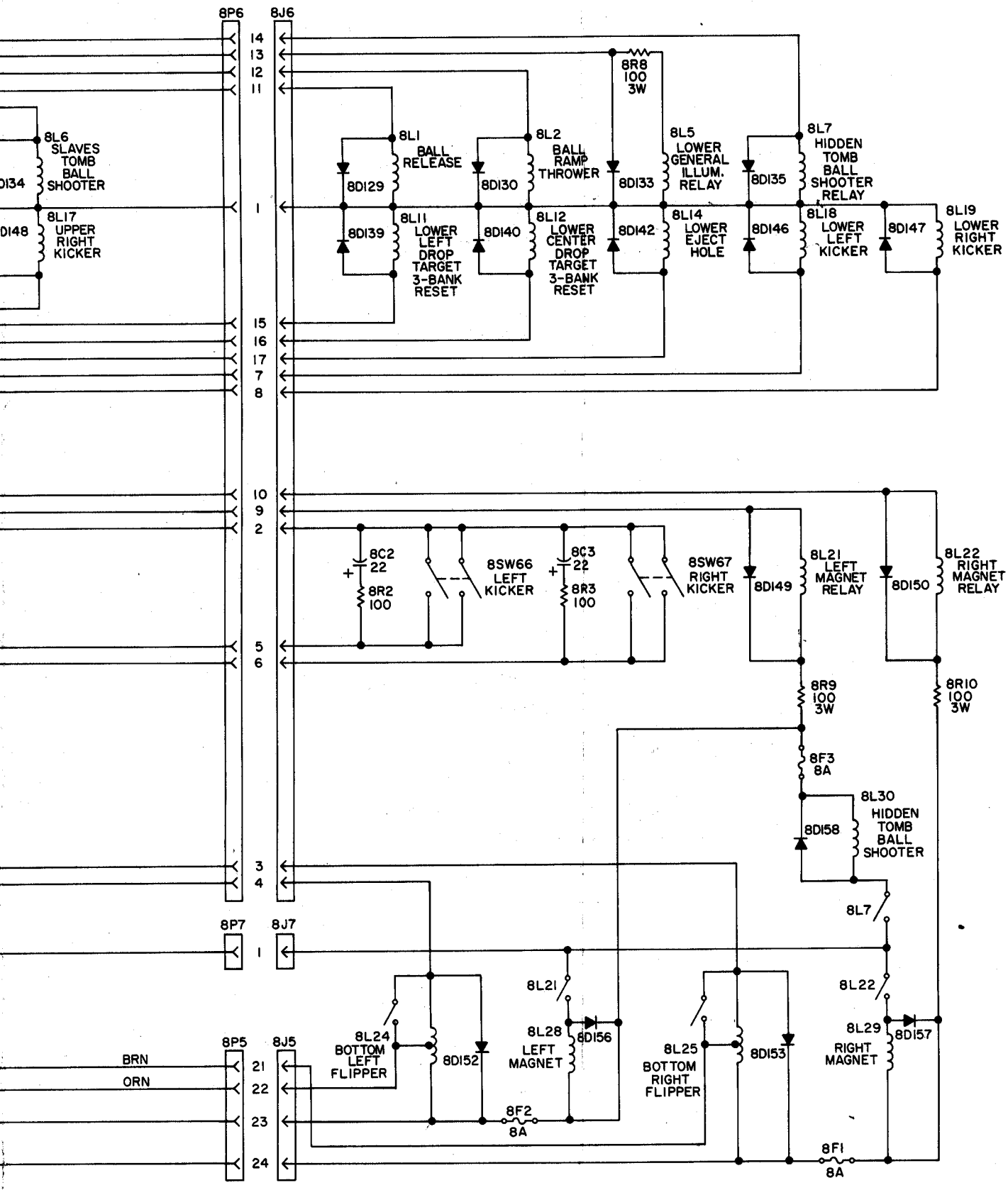

Playfield Solenoid Wiring Diagram

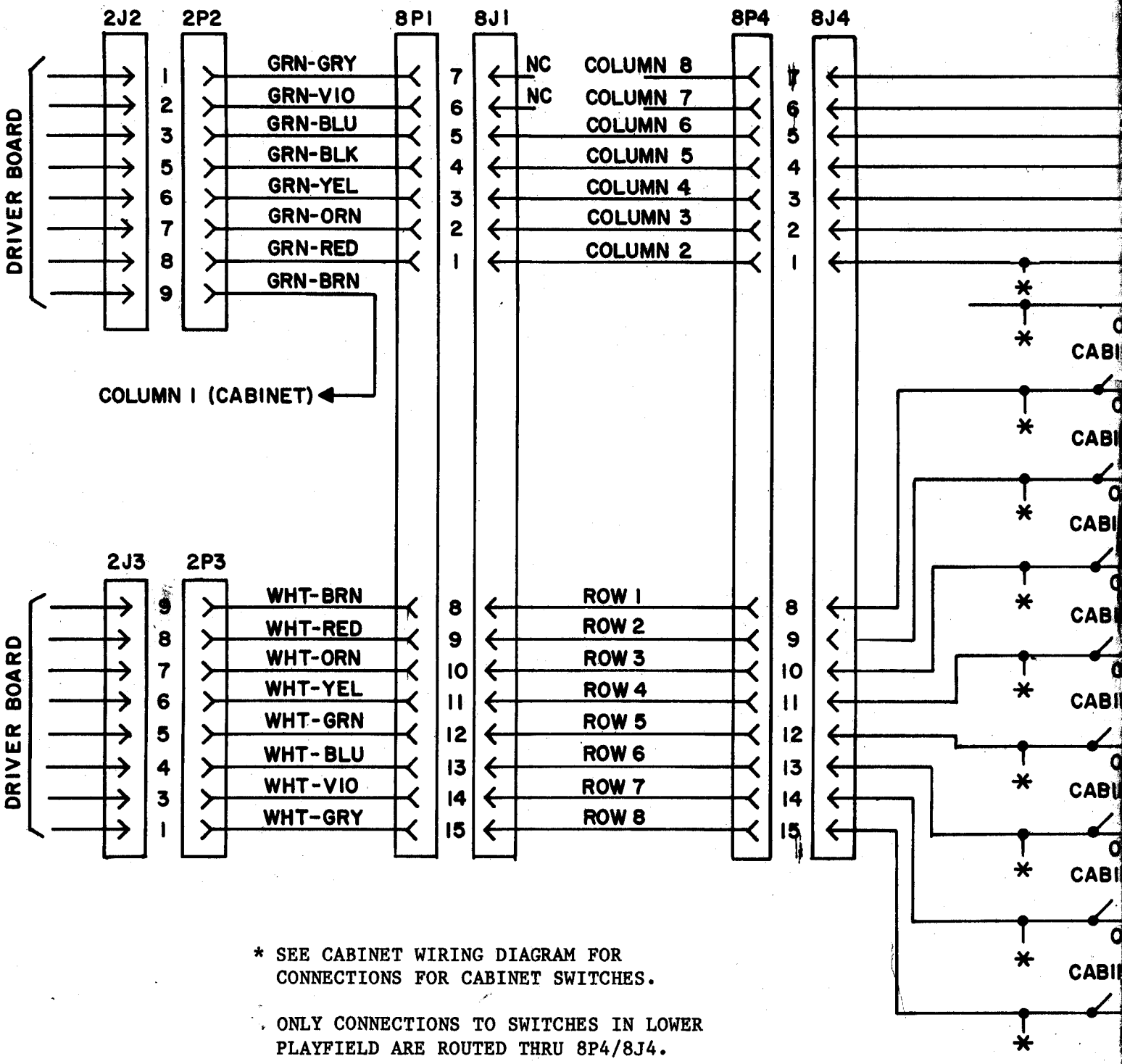

* SEE CABINET WIRING DIAGRAM FOR CONNECTIONS FOR CABINET SWITCHES.

. ONLY CONNECTIONS TO SWITCHES IN LOWER PLAYFIELD ARE ROUTED THRU 8P4/8J4.

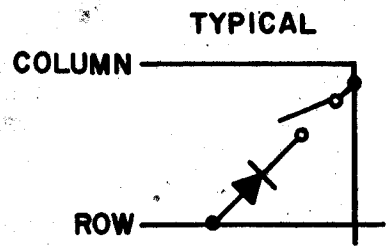

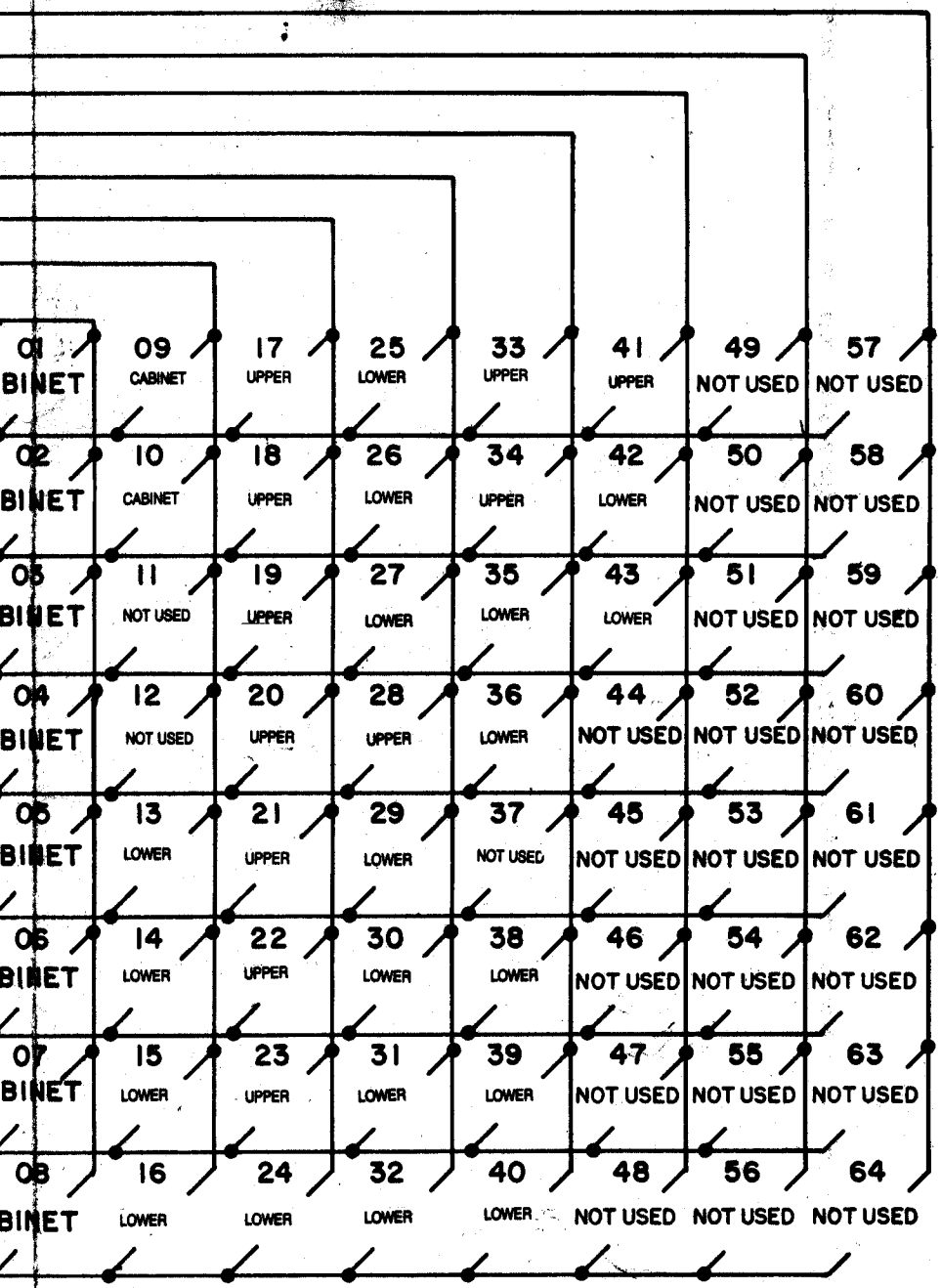

Switch No.	Function (Score*)
09	Left Magnet Button
10	Right Magnet Button
11	Not Used
12	Not Used
13	Left Inside Rollover (10,000)
14	Right Inside Rollover (10,000)
15	Left ? Lane Rollover (5,000/Mystery)
16	Right ? Lane Rollover (5,000/Mystery)
17	Upper Left 3-Bank Bottom Target (3,000)
18	Upper Left 3-Bank Center Target (3,000)
19	Upper Left 3-Bank Top Target (3,000)
20	Upper Kicker (10/110)
21	Upper Center 3-Bank Left Target (3,000)
22	Upper Center 3-Bank Center Target (3,000)
23	Upper Center 3-Bank Right Target (3,000)
24	Left Kicker (10)
25	Lower Center 3-Bank Bottom Target (3,000)
26	Lower Center 3-Bank, Center (3,000)
27	Lower Center 3-Bank, Top (3,000)
28	Upper Bull's-Eye Target (5,000/15,000)
29	Lower Right 3-Bank, Top Target (3,000)
30	Lower Right 3-Bank, Center Target (3,000)
31	Lower Right 3-Bank, Bottom Target (3,000)
32	Lower Bull's-Eye Target (5,000/15,000)
33	Slaves Tomb Shooter (20,000)
34	Upper Eject Hole (7,000)
35	Lower Eject Hole (7,000)
36	Outhole
37	Not Used
38	Ball Ramp Left Switch
39	Ball Ramp Right Switch
40	Ballshooter Trough
41	Captive Ball (5,000/5,000 per lit letter)
42	Playfield Tilt
43	Hidden Tomb Shooter (20,000)
44	Right Kicker (10)

*All scores are doubled for 2X Scoring.

Mystery for switches 15 and 16 (awarded when lit) is random bonus advances, bonus multiplier, random points, or special.

Second value for switch 20 is randomly scored.

Second value for switches 28 and 32 is scored when lit with 5X bonus multiplier.

With full bonus, 10,000 is awarded instead of each bonus advance.

Playfield Switch Wiring Diagram