Adjustments of Game Sound

To Decrease the sound, turn each pots(VR1 - VR8) as shown below.

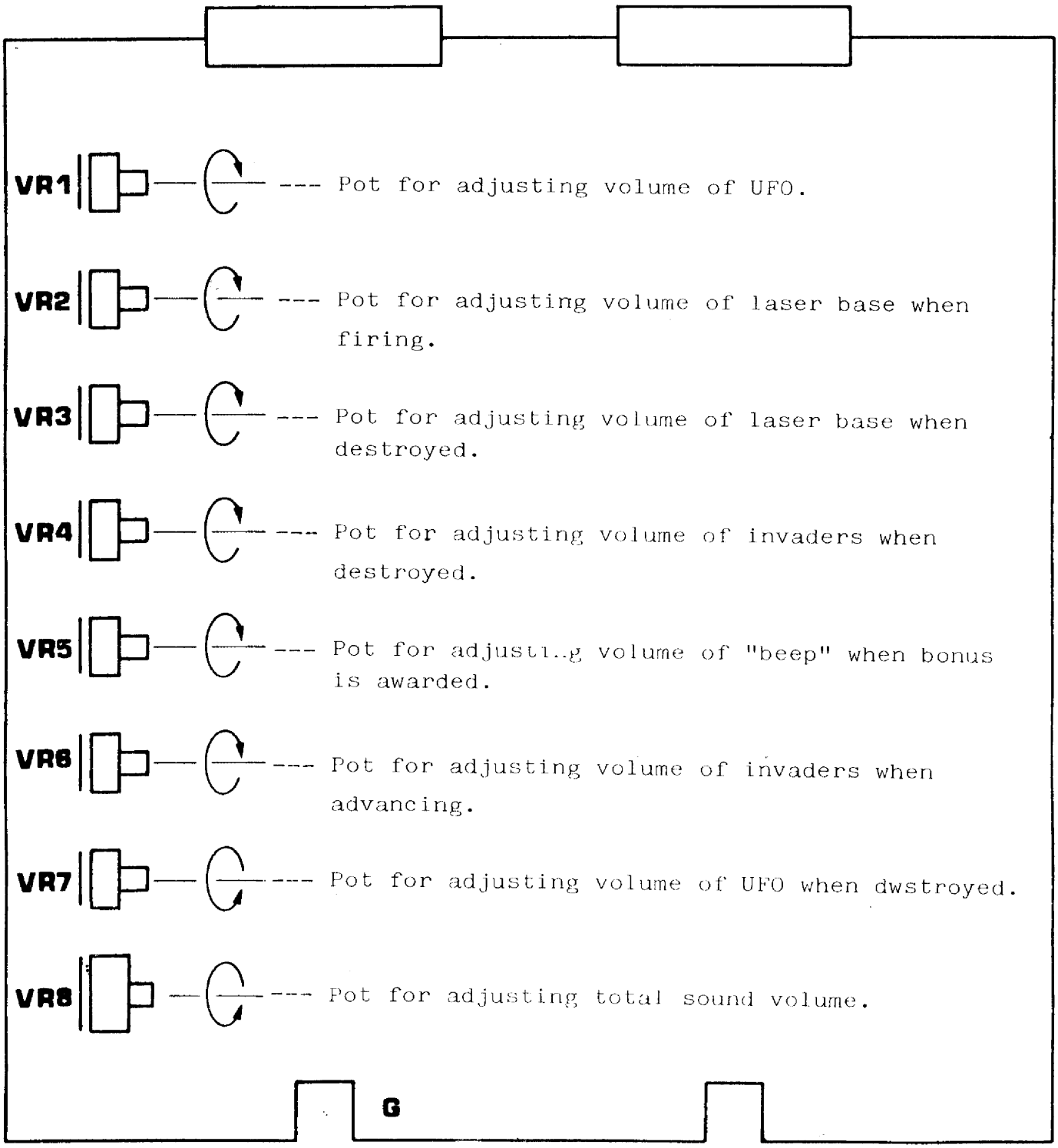

CV070011